KYMCO

OWNER'S MANUAL

KWANG YANG MOTOR CO.,LTD.

MXU 300/250

ON-ROAD

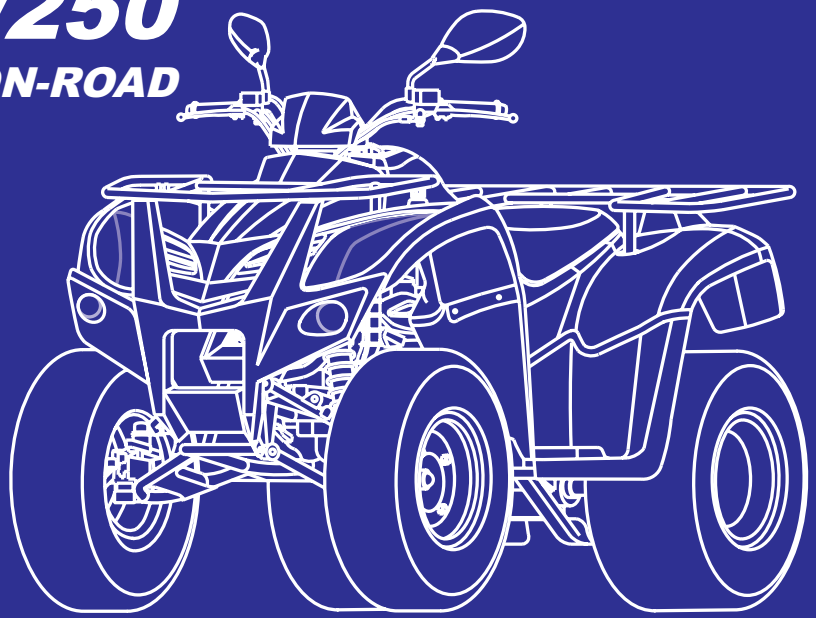

Issued: 21.02.2005

IMPORTANT NOTICES

READ THIS MANUAL CAREFULLY

Your Owner's Manual contains important information on safety, operation, and maintenance. Any one who operates this ATV should carefully read and understand the contents of this manual before riding the vehicle.

AGE RECOMMENDATION

The minimum recommended age for this ATV model is 16. Children under age 16 should never operate this vehicle.

RIDER TRAINING

Anyone who operates this vehicle should get proper instruction.

FOR ON-ROAD USE ONLY

This machine is designed and manufactured for ON-ROAD use only. It is illegal and unsafe to operate this machine on any hills and rough or loose terrain.

This machine complies with all applicable ON-ROAD noise level and spark arrester laws and regulation in effect at the time of manufacture.

Please check your local riding laws and regulations before operating this machine.

SPECIAL MESSAGES

KYMCO provides many important safety messages both in this manual and on the vehicle. For your safety and the safety of others, pay special attention to all warnings preceded by this alert symbol ⚠. Failure to follow the warnings contained in this manual can result in SERIOUS INJURY or DEATH.

⚠ **WARNING** **Indicates a strong possibility that serious injury or death may result if instructions are not followed.**

CAUTION **Indicates a possibility that equipment or property damage could result if instructions are not followed.**

Note: Gives helpful information

The Owner's Manual should be considered a permanent part of your ATV. It should remain with the vehicle at all times and stay with the ATV if it is sold.

PREFACE

Congratulations on your purchase of the KYMCO ATV. KYMCO take pride in a worldwide reputation for quality-in research, design, production and service.

For replacement parts and accessories, we recommend genuine KYMCO products. They've been specially designed for your vehicle and manufactured to meet KYMCO's demanding standards.

This manual will provide you with a good basic understanding of the features and operation of this machine. This manual includes important safety information. It provides information about special techniques and skills necessary to ride your machine. It also includes basic maintenance and inspection procedures. If you have any questions regarding the operation or maintenance of your machine, please consult a KYMCO dealer.

We wish you many years of safe and enjoyable riding.

While reading this manual, remember:

⚠ WARNING **Indicates a strong possibility that serious injury or death may result if instructions are not followed.**

All information in this publication is based on the latest product information available at the time of approval for printing. KWANG YANG MOTOR CO.,LTD reserves the right to make changes at any time without notice and without incurring any obligation.

CONTENTS

Page

LOCATION OF THE WARNING AND SPECIFICATION LABELS.....1

SAFETY INFORMATION.....5

DESCRIPTION AND MACHINE IDENTIFICATION.....10
- IDENTIFICATION NUMBER RECORDS.....10
- KEY IDENTIFICATION NUMBER.....10
- FRAME SERIAL NUMBER.....11
- ENGINE SERIAL NUMBER.....11
- PARTS LOCATION.....12

Page

CONTROL FUNCTIONS.....18
- IGNITION SWITCH.....18
- INSTRUMENTS AND INDICATOR.....19
  - Multi-function display.....21
- HANDLEBAR SWITCHES.....28
  - Horn button.....28
  - Turn signal switch.....28
  - Headlight dimmer switch.....29
  - Hazard switch.....30
  - Start switch.....31
- RECOIL STARTER.....32
- THROTTLE LEVER.....33
- SPEED LIMITER.....34
- FRONT BRAKE LEVER.....35
- REAR BRAKE LEVER.....35
- BRAKE PEDAL.....35

(Cont'd)

Page

PARKING BRAKE.....36
LOCKING STEERING.....37
DRIVE SELECT LEVER.....38
FUEL TANK CAP 39
FUEL VALVE.....39
CHOKE KNOB.....41
SEAT.....42
FLAG POLE BRACKET.....43
TRAILER HITCH.....43
STORAGE COMPARTMENT.....44
ACCESSORY SOCKET SEAT.....44

Page

PRE-OPERATION CHECKS.....46
DRIVE SELECT LEVER 47
Drive select lever adjustment.....49
FRONT AND REAR BRAKES.....51
FUEL.....52
ENGINE, TRANSMISSION OIL AND
REAR FINAL GEAR CASE OIL 54
CHAIN.....55
THROTTLE LEVER.....55
FITTINGS AND FASTENERS.....55
LIGHTS.....55
SWITCHES.....55
TIRES.....56
How to measure tire pressure 57
Tire wear limit 58
COOLANT.....58

(Cont'd)

Page

OPERATION.....60
STARTING A COLD ENGINE.....60
Using the recoil starter.....62
STARTING A WARM ENGINE.....63
WARMING UP.....63
DRIVE SELECT LEVER OPERATION AND REVERSE DRIVING.....64
ENGINE BREAK-IN.....67
PARKING.....68
Parking on a slope.....69
ACCESSORIES 70
LOADING 71

Page

RIDING YOUR ATV 73
GETTING TO KNOW YOUR ATV 74
RIDE WITH CARE AND GOOD JUDGEMENT.....75
APPAREL.....78
PRE-OPERATION CHECKS.....80
LOADING AND ACCESSORIES.....82
Loading and operational guidelines...82
Accessories.....83
MODIFICATIONS.....84
No modifications.....84
DURING OPERATION.....85
EXHAUST SYSTEM.....87
PRACTICING.....88
TURNING YOUR ATV 89
CLIMBING UP SLOPE.....90
RIDING DOWN SLOPE.....96
PARKING.....97
WHAT TO DO IF 98
WHAT TO DO 98

(Cont'd)

Page

PERIODIC MAINTENANCE AND ADJUSTMENT.....99
TOOL KIT.....99
PERIODIC MAINTENANCE/ LUBRICATION.....101
ENGINE OIL 103
TRANSMISSION OIL.....107
REAR FINAL GEAR CASE OIL (MXU 300).....109
SPARK PLUG INSPECTION.....110
AIR FILTER CLEANING.....112
AIR CLEANER HOUSING DRAIN TUBE.....115
IDLE SPEED ADJUSTMENT 116
THROTTLE LEVER ADJUSTMENT....117
VALVE CLEARANCE ADJUSTMENT..118
FRONT BRAKE PADS INSPECTION...115
REAR BRAKE PADS (MXU 250) INSPECTION.....119

Page

REAR BRAKE PADS (MXU 300) INSPECTION.....120
BRAKE FLUID INSPECTION.....121
COOLING SYSTEM INSPECTION.....123
Engine overheating.....124
DRIVE CHAIN SLACK CHECK (MXU 250).....125
Drive chain slack Adjustment (MXU 250).....125
DRIVE CHAIN CLEANING AND LUBRICATION (MXU 250).....127
REAR SWING ARM LUBRICATION (MXU 250)..... 127
DRAINING THE V-BELT COMPARTMENT.....128
CABLE INSPECTION AND LUBRICATION.....128
WHEEL REMOVAL.....129
Wheel installation.....129

(cont'd)

Page
BATTERY.....130
Battery remove.....131
Battery installation.....133
FUSE REPLACEMENT.....134
HEADLIGHT BEAM ADJUSTMENT....135
TROUBLESHOOTING 136
Troubleshooting chart.....137

Page
CLEANING AND STORAGE.....138
A. CLEANING 138
B. STORAGE 140

SPECIFICATIONS.....142

NOISE REGULATION.....146

MAINTENANCE RECORD.....147

INDEX.....148

LOCATION OF THE WARNING AND SPECIFICATION LABELS

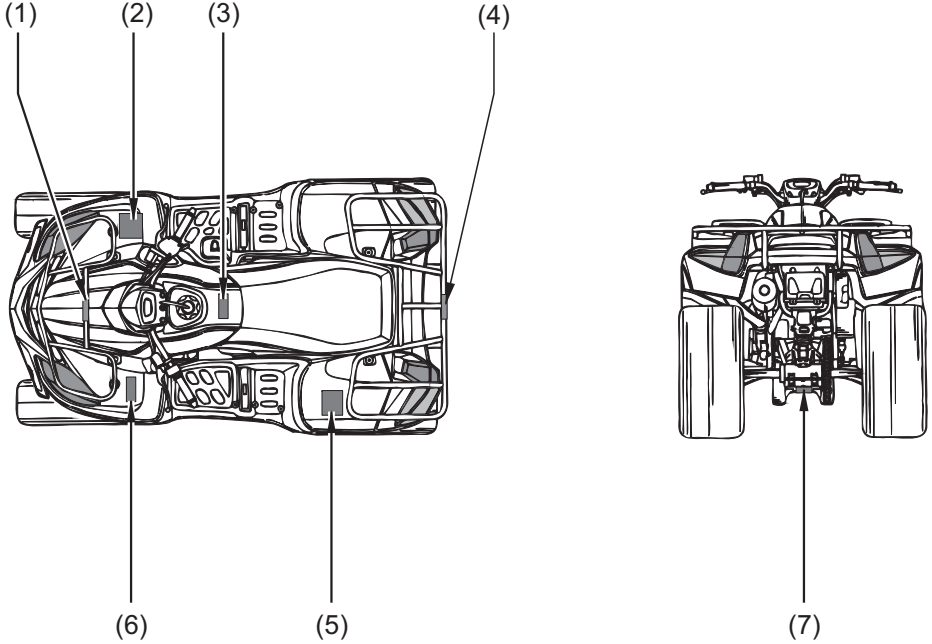

WARNING INFORMATION

Anyone who rides the vehicle should read and understand this information before riding. They contain important information for safe and proper operation of your ATV.

The labels should be considered as permanent parts of the vehicle. If a label comes off or becomes hard to read, contact your KYMCO dealer for replacements.

(1)

⚠ CAUTION

- Never carry passenger on This carrier.
- Maximum load：20 Kg (44 lbs)

(2)

⚠ WARNING

Improper ATV use can result in SEVERE INJURY or DEATH.

ALWAYS USE AN APPROVED HELMET AND PROTECTIV E GEAR

NEVER USE WITH DRUGS OR ALCOHOL

NEVER operate :

- **Without proper training or instruction.**
- **At speeds too fast for your skills or the conditions.**
  Do not operate the vehicle after consuming ALCOHOL OR DRUGS.

ALWAYS :

- **Use proper riding techniques to avoid vehicle overturns on hills and rough terrain and in turns.**
- **For your safety, wear gear to include helmet gloves and foot protection.**
- **Gasoline is flammable shut off engine, avoid sparks and open flame when refueling.**

READ OWNER'S MANUAL, FOLLOW ALL INSTRUCTIONS AND WARNINGS.

(3)

CAUTION

Before shifting, you must stop the machine and return the throttle lever to its closed position until the engine speed to the specified idling speed.

Otherwise, the transmission may be damaged.

(4)

⚠ CAUTION

· Never carry passenger on This carrier.

· Maximum load：30 Kg (66 lbs)

(5)

⚠ WARNING

IMPROPER TIRE PRESSURE OR OVERLOADING CAN CAUSE LOSS OF CONTROL.
LOSS OF CONTROL CAN RESULT IN SEVERE INJURY OR DEATH.
OPERATING TIRE PRESSURE : Set with tires cold

- Recommended :
  FRONT : 25~32kpa, (0.25~0.32kgf/cm^2), 3.5~4.5psi
  REAR : 25~32kpa, (0.25~0.32kgf/cm^2), 3.5~4.5psi
- Never set tire pressure below recommended.

(6)

⚠ WARNING

Operating this ATV if you are under the age of 16 increases your chance of severe injury or death.

NEVER operate this ATV if you are under age 16.

(7)

⚠ WARNING

Exceeding vehicle towing limit could lead to an accident. Reduce speed when towing a trailer. Read owner's manual for details.
MAXIMUM TOWING CAPACITY: 150kg (331 lbs)
TONGUE WEIGHT: 14kg (30 lbs)

⚠ SAFETY INFORMATION

AN ATV IS NOT A TOY AND CAN BE HAZARDOUS TO OPERATE. An ATV handles differently from other vehicles including motorcycles and cars. A collision can occur quickly, even during routine maneuvers, if you fail to take proper pre-cautions.

SEVERE INJURY OR DEATH can result if you do not follow these instructions:

- Read this manual and all labels carefully and follow the operating procedures described.
- Never operate an ATV without proper training or instruction.
  Beginners should receive training from a certified instructor.
- Always follow the age recommendation:
  - A child under 16 years old should never operate an ATV with engine size greater than 90cc.
- Never allow a child under age 16 to operate an ATV without adult supervision, and never allow continued use of an ATV by a child if he or she does not have the abilities to operate it safely.
- Never operate an ATV without wearing an approved motorcycle helmet that fits properly. You should also wear eye protection (goggles or face shield), gloves, boots, long-sleeved shirt or jacket, and long pants.

- Never consume alcohol or drugs before or while operating this ATV.
- Never operate at speeds too fast for your skills or the conditions. Always go at a speed that is proper for the terrain, visibility and operating conditions, and your experience.
- Never attempt wheel, jump, or other stunt.
- Always inspect your ATV each time you use it to make sure it is in safe operating condition. Always follow the inspection and maintenance procedures and schedules described in this manual.
- Always keep both hands on the handlebars and both feet on the footboards of the ATV during operation.
- Always go slowly and be extra careful when operating on unfamiliar terrain. Always be alert to changing terrain conditions when operating the ATV.
- Never operate on excessively rough, slippery or loose terrain.
- Always follow proper procedures for turning as described in this manual. Practice turning at low speeds before attempting to turn at faster speeds. Do not turn at excessive speed.
- Never operate the ATV on hills.
- Always follow proper procedures for climbing slopes as described in this manual. Check the terrain carefully before you start up any slope. Shift your weight forward. Never open the throttle suddenly. Never go over the top of a slope at high speed.

- Always follow proper procedures for going down slopes and for braking on slopes as described in this manual. Check the terrain carefully before you start down any slope. Shift your weight backward. Never go down a slope at high speed. Avoid going down slope at an angle that would cause the vehicle to lean sharply to one side. Go straight down the slope where possible.
- Never attempt to turn the ATV around on any slope until you have mastered the turning technique described in this manual on level ground. Avoid crossing the side of a steep slope if possible.
- Always check for obstacles before operating in a new area. Never attempt to operate over large obstacles, such as large rocks or fallen trees. Always follow proper procedures when operating over obstacles as described in this manual.
- Always be careful when skidding or sliding. Learn to safely control skidding or sliding by practicing at low speeds and on level, smooth terrain. On extremely slippery surfaces, such as ice, go slowly and be very cautious in order to reduce the chance of skidding or sliding out of control.
- Never operate an ATV in fast flowing water or in water deeper than that recommended in this manual. Remember that wet brakes may have reduced stopping ability. Test your brakes after leaving water. If necessary, apply them several times to let friction dry out the linings.
- Always use the size and type tires specified in this manual. Always maintain proper tire pressure as described in this manual.
- Never modify an ATV through improper installation or use of accessories.
- Never exceed the stated load capacity for an ATV. Cargo should be properly distributed and securely attached. Reduce speed and follow instructions in this manual for carrying cargo. Allow greater distance for braking.

⚠ WARNING

POTENTIAL HAZARD

Improper handling of gasoline.

WHAT CAN HAPPEN

Gasoline can catch fire and you could be burned.

HOW TO AVOID THE HAZARD

Always turn off the engine when refueling.

Do not refuel right after the engine has been running and is still very hot.

Do not spill gasoline on the engine or exhaust pipe/muffler when refueling.

Never refuel while smoking, or while in the vicinity of sparks, open flames, or other sources of ignition such as the pilot lights of water heaters and clothes dryers.

When transporting the machine in another vehicle, be sure it is kept upright and that the fuel cock is in the "OFF" position.

Otherwise, fuel may leak out of the carburetor or fuel tank.

WHAT CAN HAPPEN

Gasoline is poisonous and can cause injuries.

HOW TO AVOID THE HAZARD

If you should swallow some gasoline or inhale a lot of gasoline vapor, or get some gasoline in your eyes, see your doctor immediately.

If gasoline spills on your skin, wash with soap and water. If gasoline spills on your clothing, change your clothes.

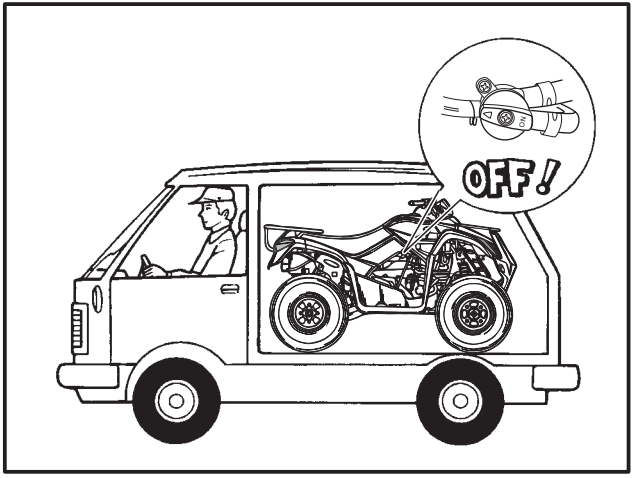

⚠ WARNING

POTENTIAL HAZARD

Starting or running the engine in a closed area.

WHAT CAN HAPPEN

Exhaust fumes are poisonous and may cause loss of consciousness and death within a short time.

HOW TO AVOID THE HAZARD

Always operate your machine in an area with adequate ventilation.

DESCRIPTION AND MACHINE IDENTIFICATION

IDENTIFICATION NUMBER RECORDS

Record the keys identification number, frame serial number and engine serial number information for assistance when order replacement parts.

IGNITION SWITCH KEY NO.

_____

STEERING LOCK KEY NO.

_____

FRAME NO. _____

ENGINE NO. _____

KEYS IDENTIFICATION NUMBER

The keys identification number is stamped on the hang tag as shown in the following illustration.

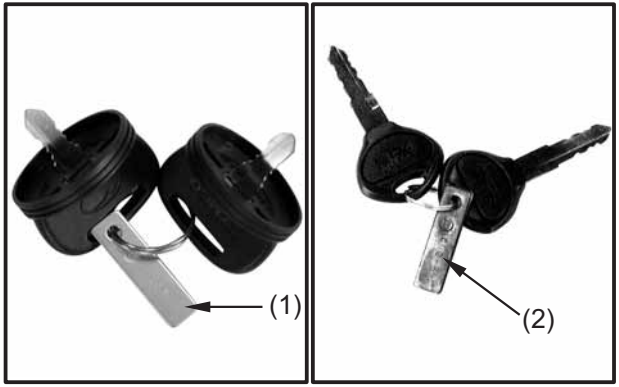

(1) Ignition switch key identification number

(2) Steering lock key identification number

FRAME SERIAL NUMBER

The frame serial number is stamped on the front of the frame.

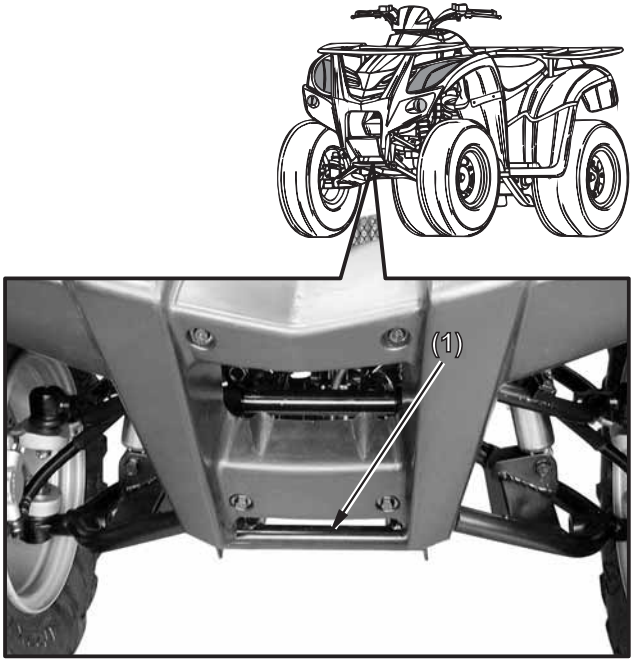

(1) Frame serial number

ENGINE SERIAL NUMBER

The engine serial number is stamped on the left crankcase.

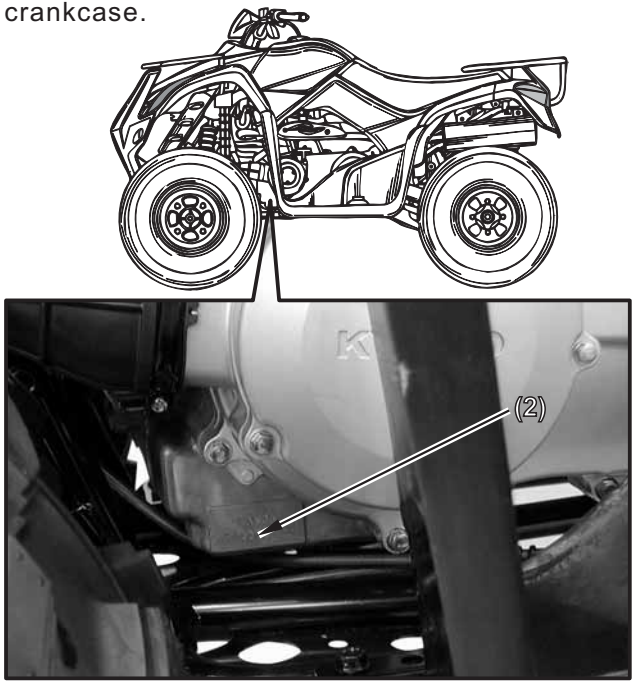

(2) Engine serial number

PARTS LOCATION

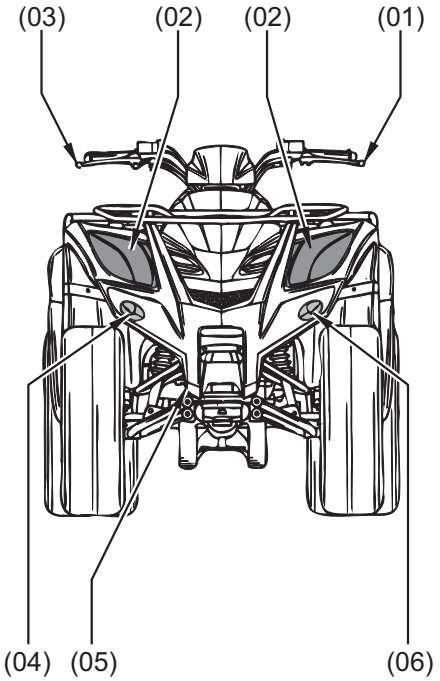

(01) Rear brake lever
(02) Headlights/Position lights
(03) Front brake lever
(04) Right front turn signal light
(05) Steering handlebar lock
(06) Left front turn signal light

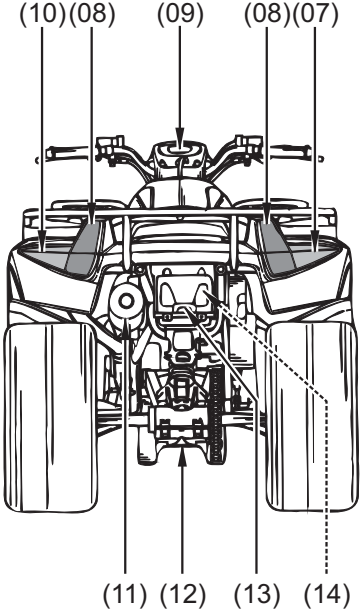

(07) Right rear turn signal light
(08) Taillights/Stop lights
(09) Instrument and indicators
(10) Left rear turn signal light
(11) Exhaust system
(12) Trailer hitch
(13) License light
(14) Battery

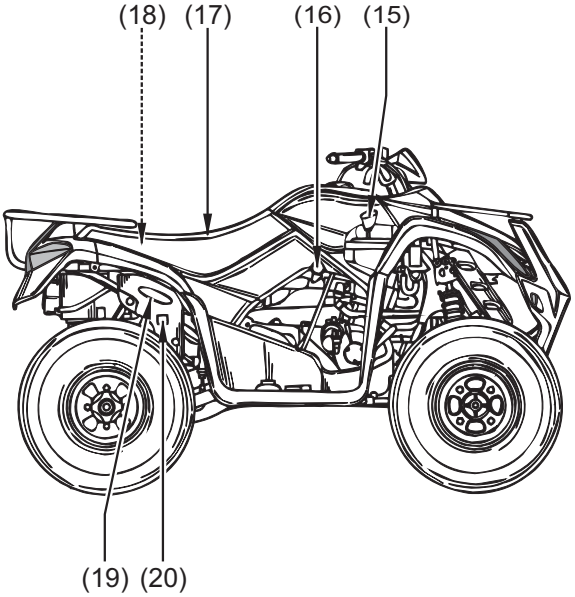

(15) Drive select lever
(16) Fuel valve
(17) Seat
(18) Tool kit
(19) Reservoir water tank
(20) Brake pedal fluid reservoir

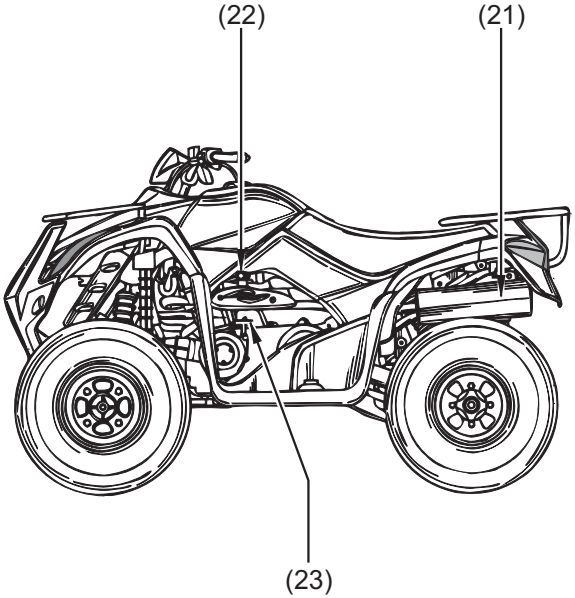

(21) Exhaust system
(22) Choke knob
(23) Recoil starter

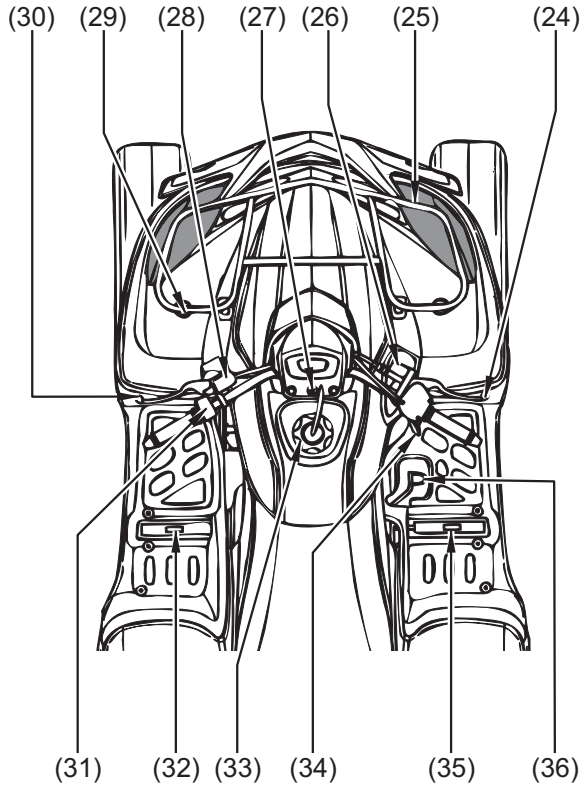

(24) Front brake lever/Parking brake
(25) Front cargo rack
(26) Front brake fluid reservoir
(27) Ignition switch
(28) Rear brake fluid reservoir
(29) Accessory socket seat
(30) Rear brake lever
(31) Headlight dimmer switch
Starter button
Hazard switch
Turn signal switch
Horn switch
(32) Left footpeg
(33) Fuel fill cap
(34) Throttle lever
(35) Right footpeg
(36) Rear brake pedal

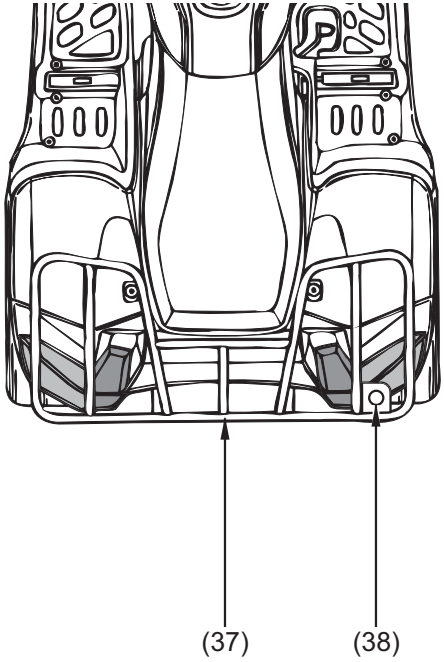

(37) Rear cargo rack
(38) Flag pole bracket

NOTE:

The machine you have purchased may differ slightly from those shown in the figures of this manual.

CONTROL FUNCTIONS

IGNITION SWITCH

Functions of the respective switch positions are as follows:

OFF:

All electrical circuits are switched off except hazard light. The key can be removed in this position.

ON :

With the transmission in neutral and set the parking brake, the engine can be started.

The key can not be removed.

" ☼ ":

The ignition switch is ON while the position light and taillight will light.

The key can not be removed.

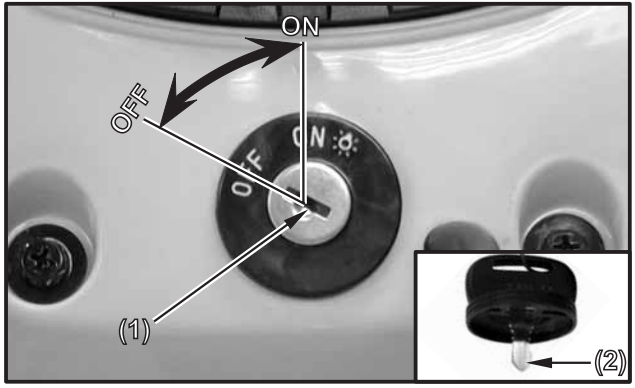

(1) Ignition switch (2) Key

INSTRUMENTS AND INDICATOR

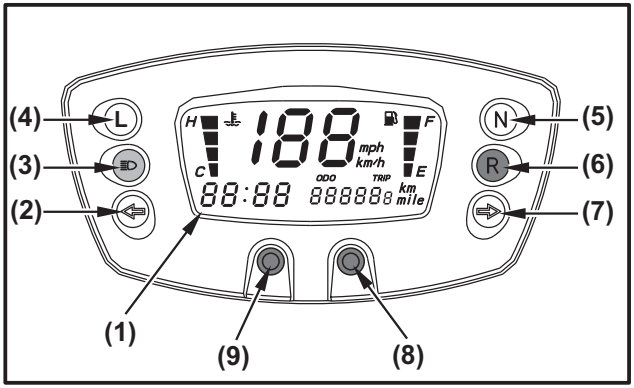

(1) Multi-function display
(2) Left turn signal indicator
(3) High beam indicator
(4) Low gear indicator
(5) Neutral indicator
(6) Reverse indicator
(7) Right turn signal indicator
(8) Mode/Adjust button (A)
(9) Mode/Adjust button (B)

(1) Multi-function display

The display includes the following functions:
Speedometer
Odometer/Tripmeter
Digital clock
Coolant temperature gauge
Fuel gauge

(2) Left turn signal indicator

Flashes when the left turn signal operates.

NOTE:

Both left and right turn signal indicator will flash at the meantime when the hazard switch is operated and turn signal switch is turned off.

(3) High beam indicator

The ignition switch is at the " " position, the high beam indicator lamp will light when the headlight switch to select high beam ( ).

NOTE:

The headlight can be turned on only when the engine is running.

(4) Low gear indicator

The low gear indicator will light when the transmission is in low gear and the ignition switch is ON.

(5) Neutral indicator

The neutral indicator will light when the transmission is in neutral and the ignition switch is ON.

(6) Reverse indicator

The reverse indicator will light when the transmission is in reverse and the ignition switch is ON.

(7) Right turn signal indicator

Flashes when the right turn signal operates.

NOTE:

Both left and right turn signal indicator will flash at the meantime when the hazard switch is operated and turn signal switch is turned off.

(8) (9) Mode/Adjust buttons

These buttons is used to select the tripmeter, the odometer, the km/h, the mph, the km or the mile.

These buttons is also used to adjust the time and reset the tripmeter.

Multi-function display

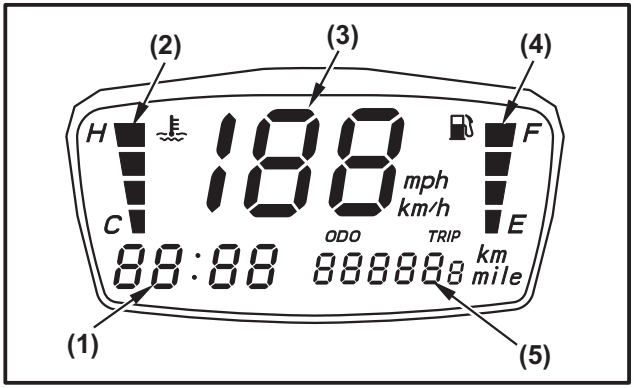

(1) Digital clock
(2) Coolant temperature gauge
(3) Speedometer
(4) Fuel gauge
(5) Odometer/Tripmeter

(1) Digital clock
Show the time (hours and minutes) while the ignition is ON.

To adjust the time manually, proceed as follows:
1. Turn the ignition switch ON.
2. Press and hold both the Mode/Adjust button (A) and Mode/Adjust button (B) for more than 2 seconds. The clock will be set in the adjust mode with the hour display flashing.

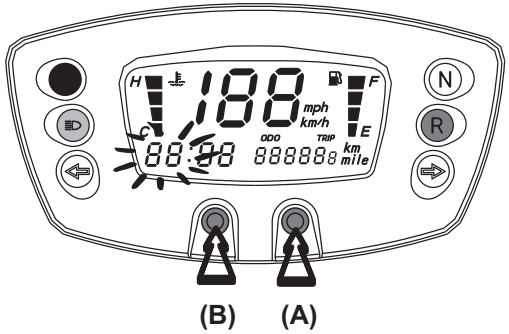

3. To set the hour, press the Mode/Adjust button (A) until the desired hour.

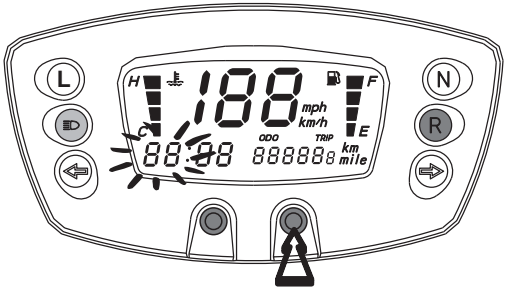

(A)

4. Press the Mode/Adjust button (B). The minute display will start flashing.

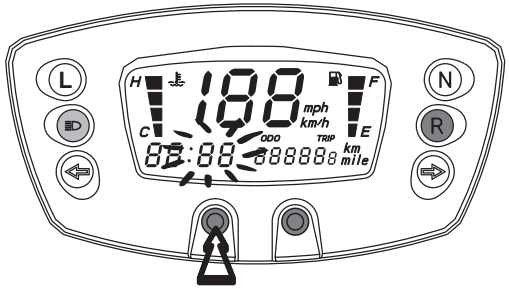

(B)

5. To set minute, press the Mode/Adjust button (A) until the desired minute.

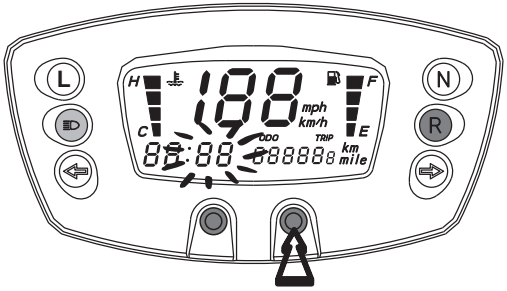

(A)

6. To end the adjustment, press the Mode/Adjust button (A) and Mode/Adjust button (B). The display will stop flashing automatically and the adjustment will be cancelled if the button is not pressed for about 10 seconds.

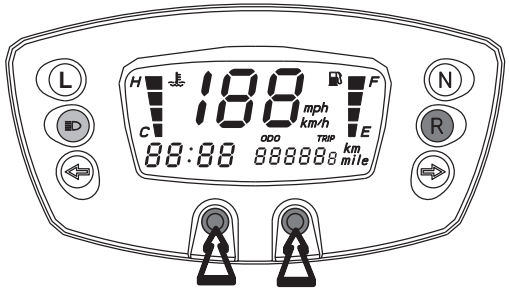

(B) **(A)**

(2) Coolant temperature gauge

The coolant temperature gauge shows coolant temperature.

The normal operating temperature range is within the section between the segment C and segment H.

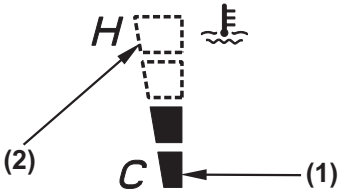

(1) Segment C
(2) Segment H

Overheating message

When the coolant is over specified temperature, the coolant temperature gauge flashing.
If this occurs, stop the engine and check the reserve tank coolant level. Read page 124 and to not ride the ATV until the problem has been corrected.

CAUTION:

1. The engine may overheat if the ATV is overloaded. If this happens, reduce the load to specification.
2. Restart after making sure that the indicator is out. Continuous use while the indicator is flashing may cause damage to the engine.

(3) Speedometer

Shows riding speed in km/h or mph.

Press and hold Mode/Adjust button (B)for more than 2 seconds to select km/h or mph.

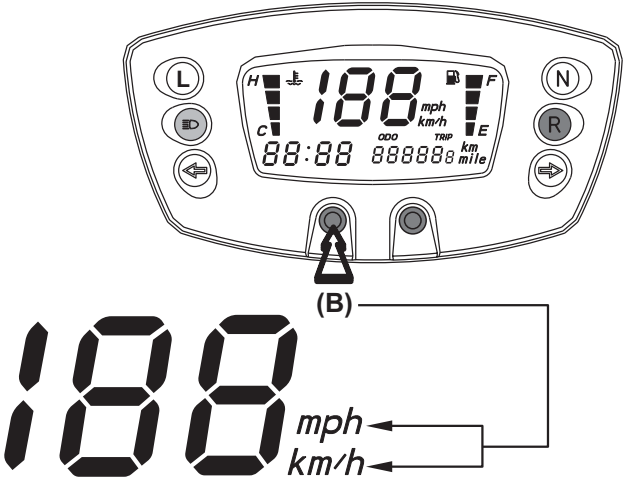

(4) Fuel gauge

The fuel gauge shows the approximate fuel supply available in a graduated display. The normal operating fuel range is with the section between the segment F and segment E. When the segment E or the fuel indicator flashes, fuel will be low and you should refill the tank as soon as possible.

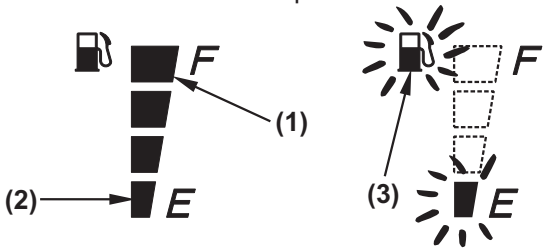

(1) Segment F

(2) Segment E

(3) Fuel indicator

(5) Odometer/Tripmeter

The odometer shows the total distance travelled in Km or in miles.

The tripmeter shows the trip distance travellled in Km or in miles.

Press and hold Mode/Adjust button (B)for more than 2 seconds to select km or mile.

Press and hold Mode/Adjust button (A)for more than 2 seconds to select OD0 or TRIP

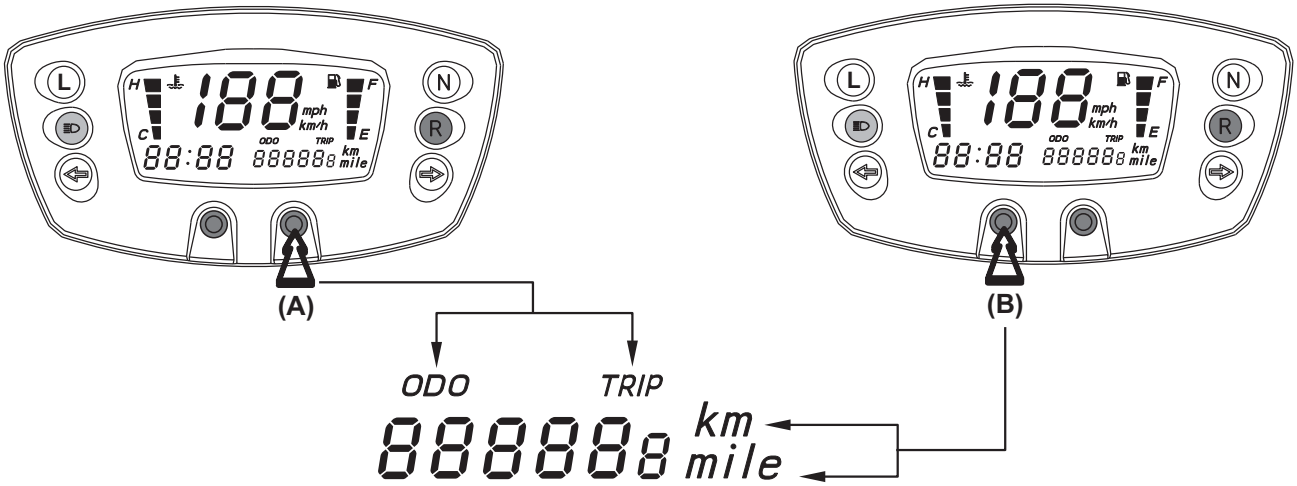

To reset the tripmeter:

1. Press and hold Mode/Adjust button (A)for more than 2 seconds to select TRIP and do not release the Mode/Adjust button (A).
2. Press and hold the Mode/Adjust button (B) until the tripmeter is reset.

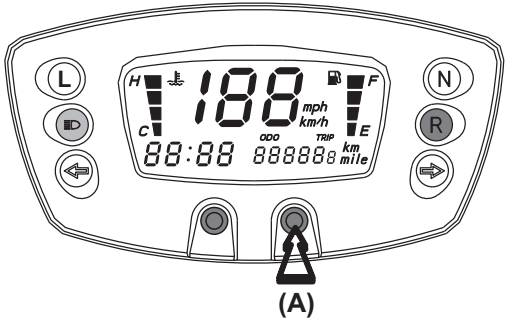

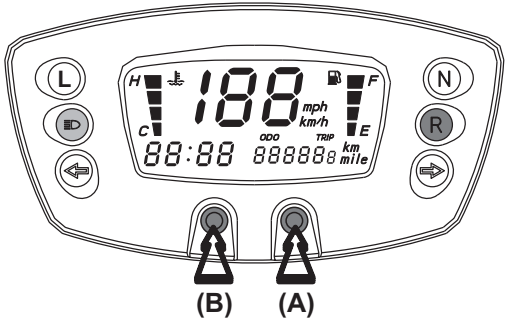

HANDLEBAR SWITCHES

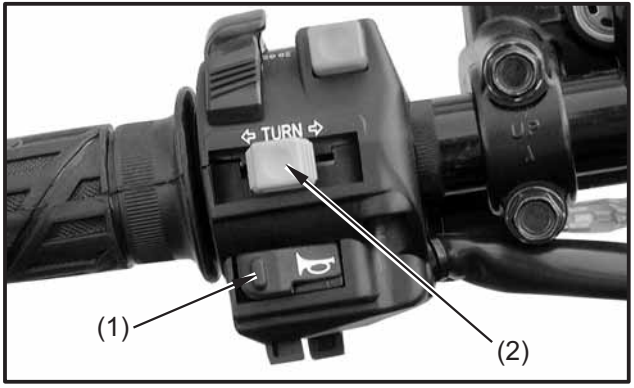

(1) Horn button

(2) Turn signal switch

Horn button

When the ignition switch is ON, push the horn button and it will sound.

Turn signal switch

Use the turn signal switch while turning to another direction or shifting to another lane. The turn signal light will flash when the switch is operated and ignition switch is ON.

"⇦" For turning to the "left".

"⇨"For turning to the "right".

The instrument turn signal indicator light will also flash when the switch is operated.

Push the switch and it will release.

CAUTION:

- The turn signal light will not release automatically. Be sure to reset it after use; otherwise it may affect the traffic safety.
- The turn signal switch does not work when the ignition switch is "OFF".

(1) Headlight dimmer switch

Headlight dimmer switch

Turn the switch to the "≡D" position to switch on the low beam.

Turn the switch to the "≡D" position to switch on the high beam.

Turn the switch to the "≡0" position to switch off the headlight.

NOTE:

- The headlight can be turned on only when the ignition switch is in the " ☼ " position and engine is running.
- The illumination of headlight will be available fully only when the engine speed is more than 2000 rpm.
- Do not turn on the headlight when the engine is not running because it can drain the battery and without charging in this ATV's electrical system.

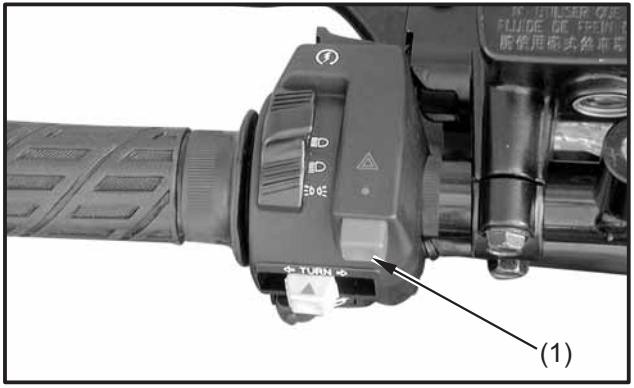

(1) Hazard switch

Hazard switch

When the hazard switch is pressed, the right and left turn signal lights flash together. The instrument turn signal indicator light will also flash when the switch is operated.

When the hazard switch is pressed again, the right and left turn signal lights go out together.

CAUTION:

- Turn on this switch when parking or there is a special condition.
- After the hazard switch is turned on, it will not reset automatically. Be sure to reset it after use to avoid affecting the traffic safety.
- When the signal lights are flashing , the hazard switch does not work.
- When the ignition switch is "OFF" , the hazard light will still work.

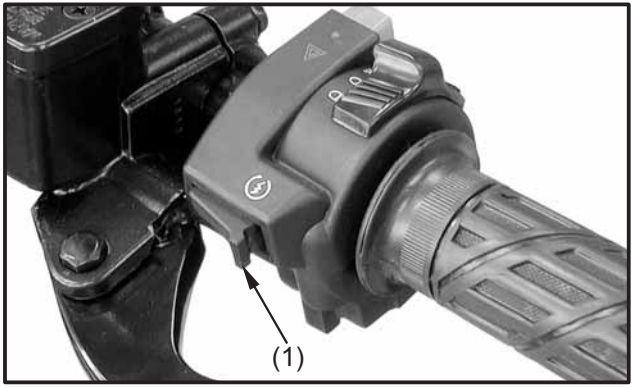

(1) Start switch

Start switch "⊛"
The start switch is used for starting the engine.
Pushing the switch in starts the engine.

CAUTION:

See starting instructions prior to starting engine (see page 60 for details).

RECOIL STARTER

The recoil starter is on the left side of the ATV. It is used to start the engine when the battery is low.

See using the recoil starter (page 62).

1. Turning starter grip counterclockwise to unlock and grasp the starter grip firmly, then pull it out slowly until it seats lightly.

2. Pull the grip up briskly and fully.

3. After the engine starts, allow the starter grip to return slowly and turning it clockwise to lock.

NOTE:

Do not allow water enter the V-belt compartment, always lock the recoil starter.

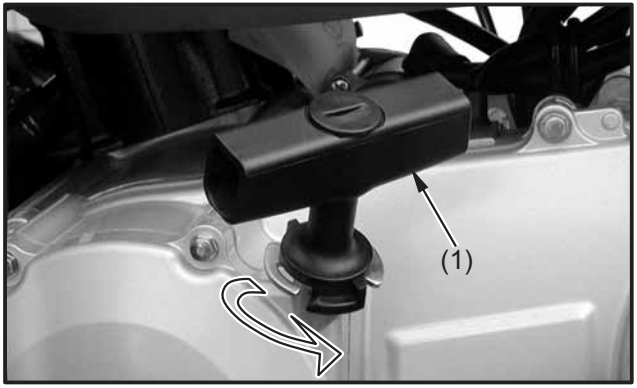

(1) Recoil starter

THROTTLE LEVER

It is operated by the thumb. Pressing the lever opens the throttle. When pressure is released, spring tension automatically closes the throttle. Regulate the speed of the machine by varying the throttle position.

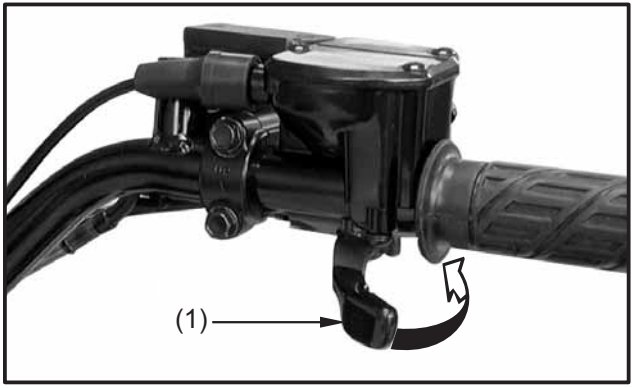

(1) Throttle lever

⚠ WARNING

POTENTIAL HAZARD

Malfunction of throttle.

WHAT CAN HAPPEN

The throttle could be hard to operate, making it difficult to speed up or slow down when you need to. This could cause an accident.

HOW TO AVOID THE HAZARD

Check the operation of the throttle lever before you start the engine. If it does not work smoothly, check for the cause.

Correct the problem before riding the ATV.

Consult a KYMCO dealer if you can't find or solve the problem yourself.

SPEED LIMITER

The speed limiter keeps the throttle from fully opening, even when the throttle lever is pushed to the maximum. Screwing in the adjuster limits the maximum engine power available and decreases the maximum speed of the ATV.

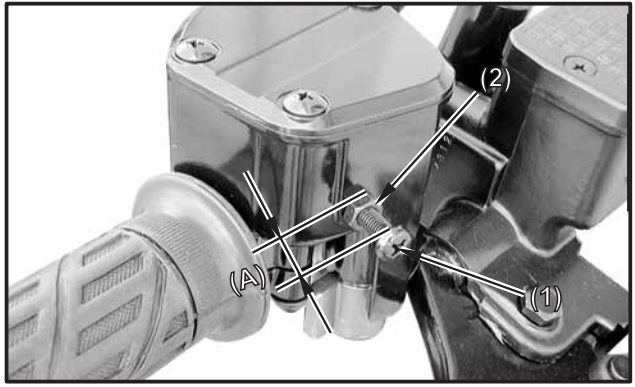

(1) Adjuster (2) Locknut (A) 13mm(0.52in)

⚠ WARNING

POTENTIAL HAZARD
Improper adjustment of the speed limiter and throttle.

WHAT CAN HAPPEN
The throttle cable could be damaged. Improper throttle operation could result. You could lose control, have an accident or be injured.

HOW TO AVOID THE HAZARD
Do not turn the speed adjuster out more than 13 mm (0.52 in). Always make sure the throttle lever free play is adjusted to 1.0~4.0 mm (0.04~0.16 in). See page 117.

FRONT BRAKE LEVER

The front brake lever is next to the right handgrip.

The front brakes are operated by squeezing the front brake lever.

REAR BRAKE LEVER

The rear brake is operated by squeezing the rear brake lever, near left handgrip.

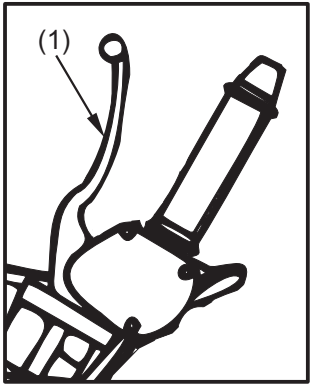

(1) Front brake lever

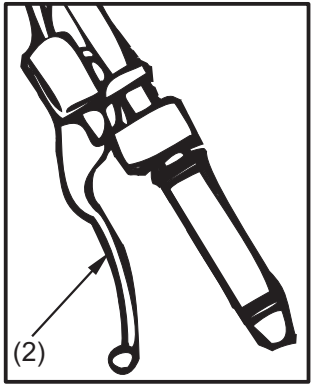

(2) Rear brake lever

BRAKE PEDAL

This ATV is equipped with a combined brake system. Operating the brake pedal applies the rear brake and a portion of the front brake.

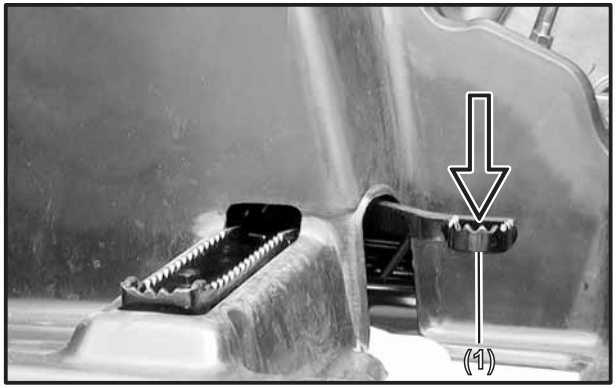

(1) Rear brake pedal

PARKING BRAKE

To set the parking brake, squeeze the front brake lever and lock it with the lock lever. Always set the parking brake when parking and before starting the engine.

To unlock the parking brake, squeeze the front brake lever until the lock lever releases.

Using the parking brake in freezing weather may cause the brakes to freeze in the locked position. (See page 68.)

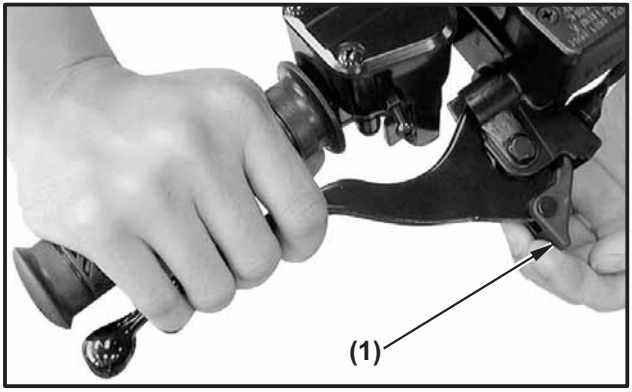

(1) Lock lever

⚠ WARNING

POTENTIAL HAZARD

Improper use of the parking brake.

WHAT CAN HAPPEN

The ATV could start moving unexpectedly if the parking brake is not applied before starting the engine. This could cause loss of control or a collision.

The brake could overheat if you ride the ATV without releasing the parking brake. You could lose braking performance which could cause an accident. You could also wear out the brakes prematurely.

HOW TO AVOID THE HAZARD

Always set the parking brake before starting the engine.

Always be sure you have released the parking brake before you begin to ride.

LOCKING STEERING

Turn the steering handlebar left to full and turn the key clockwise, the steering handlebar is locked.

The key can be taken out.

Turn the key counterclockwise, the steering handlebar is released automatically.

The key can be taken out.

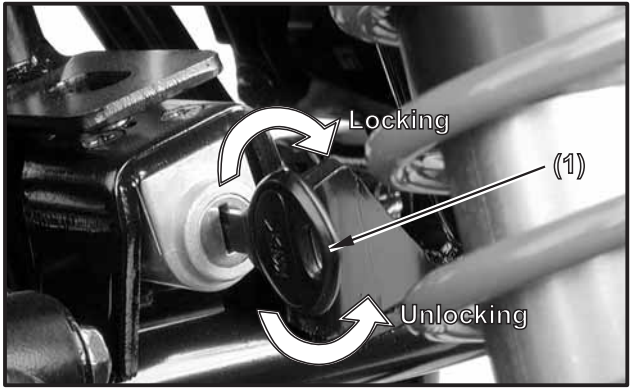

(1) Steering lock key

⚠ WARNING

POTENTIAL HAZARD

Improper use of the locking steering.

WHAT CAN HAPPEN

The ATV could cause loss of control or overturn.

HOW TO AVOID THE HAZARD

Always be sure you have released the locking steering handlebar and steering lock key is taken out before you begin to ride.

Never lock the steering handlebar, when the engine is starting.

DRIVE SELECT LEVER

The drive select lever is used for driving the machine either forward or in reverse. Refer to page 49 ~ 51 and 64 ~66 for drive select lever adjustment and operation.

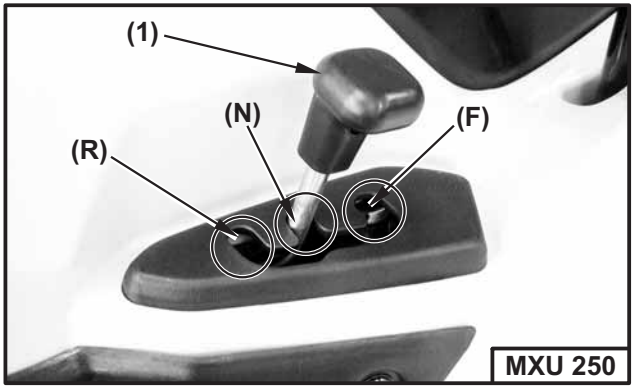

(1) Drive select lever
(R) For reverse drive
(N) Neutral
(F) For forward drive

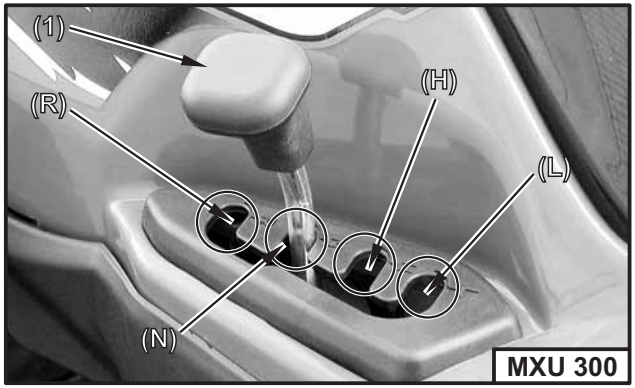

(1) Drive select lever
(R) For reverse drive
(N) Neutral
(H) For forward drive in high gear
(L) For forward drive in low gear

FUEL TANK CAP

After refueling, be sure to tighten the fuel tank cap until it clicks.

Insert the breather tube into the handlebar cover hole.

TO refuel refer to page 52~53.

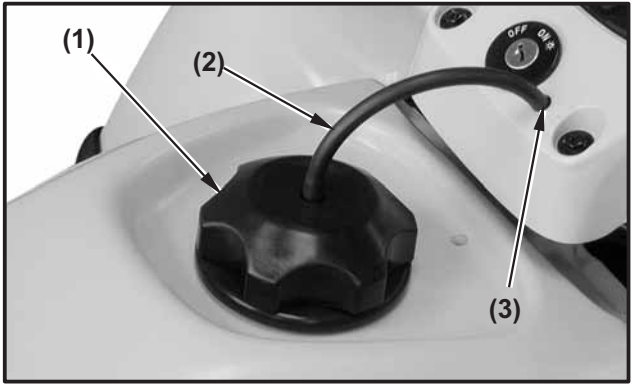

(1) Fuel tank cap

(2) Breather tube

(3) Handlebar cover hole

FUEL VALVE

The fuel valve supplies fuel from the fuel tank to the carburetor. The fuel valve has three positions.

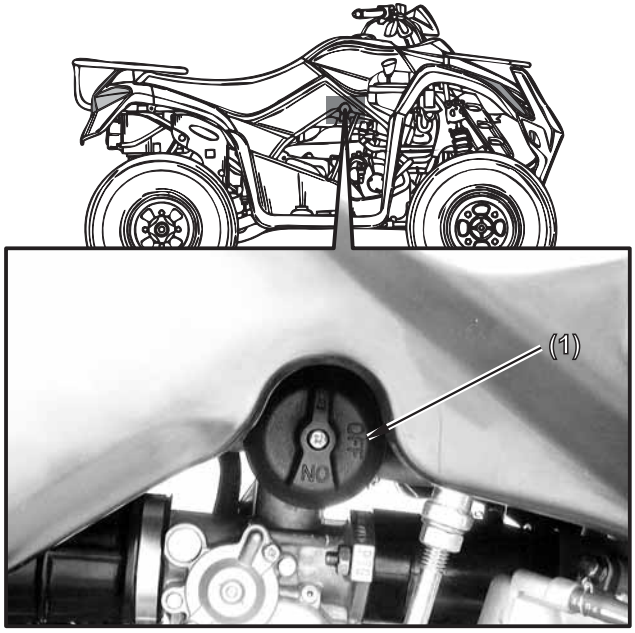

(1) Fuel valve (MXU 250)

OFF: With the lever and " △ " mark in this position fuel will not flow. Always turn the lever to this position when the engine is not running.

ON: With the lever " △ " mark in this position, fuel flows to the carburetor. Normal riding is done with the lever in this position.

RES: This indicates reserve. If you run out of fuel while riding, turn the lever " △ " mark to this position. THEN FILL THE FUEL TANK AT THE FIRST OPPORTUNITY. After refueling, return the fuel valve lever to the "ON" position.

NOTE:

After refueling, do not operate the ATV with the fuel valve in the RES position. If you run out of fuel, there will be no reserve supply.

OFF

ON

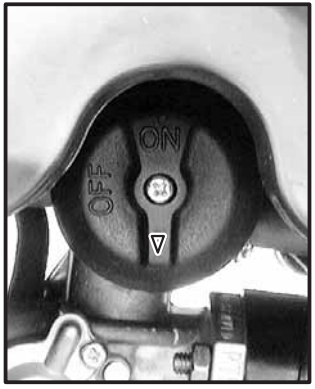

RES

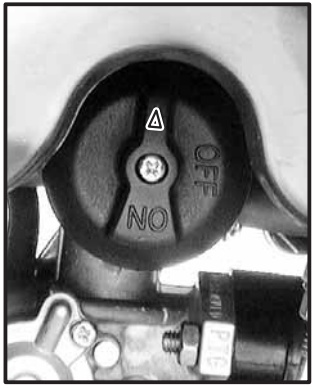

CHOKE KNOB

Starting a cold engine requires a richer air-fuel mixture. A separate starter circuit supplies this mixture.

Move in direction (A) to turn on the choke knob.

Move in direction (B) to turn off the choke knob.

Refer to "starting a cold engine" for proper operation. (See page 61.)

CAUTION:

- Extended use of the choke may impair piston and cylinder wall lubrication and shorten the life of the engine.
- Pushing the choke knob too hard to the OFF position may dislodge the choke cable boot. If this happens, water and dirt may enter the choke cable and cause corrosion. If the choke is hard to actuate, or feels like it is sticking, check the cable boot.

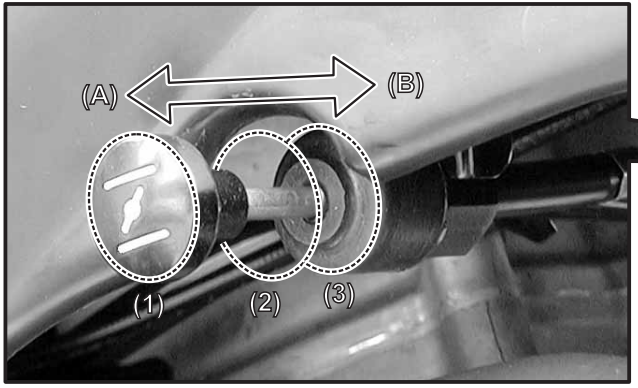

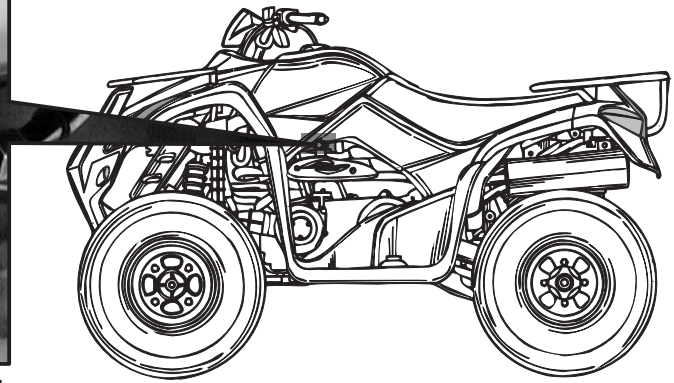

(1) Fully open (2) Half open (3) Closed

(A) ON position (B) OFF position

SEAT

To remove the seat, pull right the seat lock lever and pull up the seat at the rear.

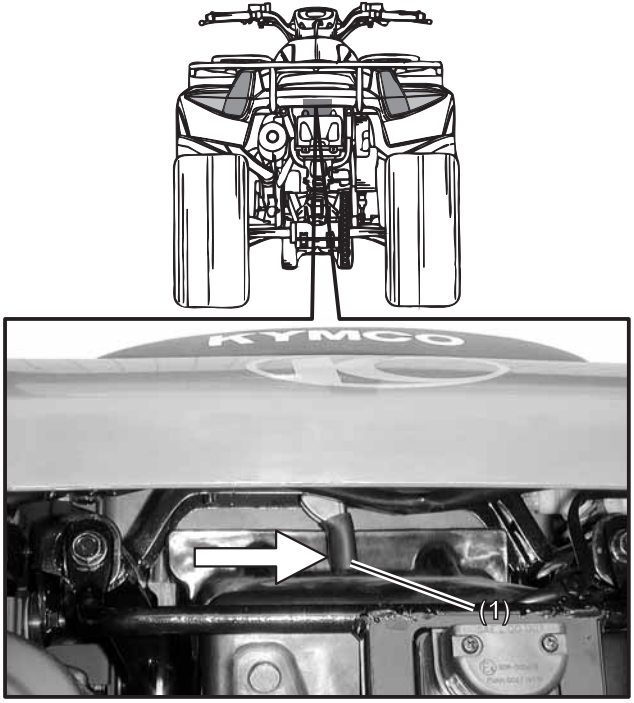

(1) Seat lock lever

To install the seat, align the tabs on the seat with the grommets on the frame and press the seat down until it locks.

NOTE:

Make sure that the seat is securely fitted.

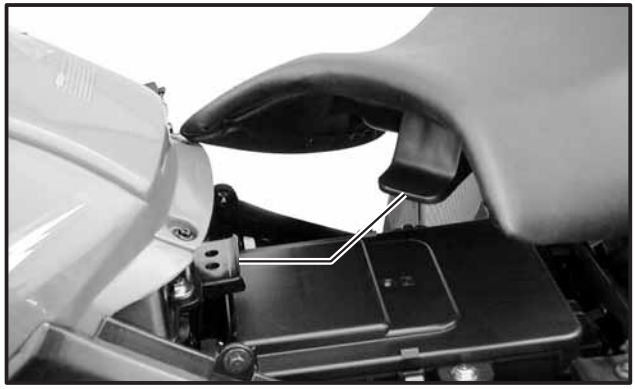

FLAG POLE BRACKET

Flag poles are optional equipment available from your KYMCO dealer. To mount a flag pole in the bracket to make you more visible.

NOTE:

Flag poles are required in some riding areas. Check local regulations before riding.

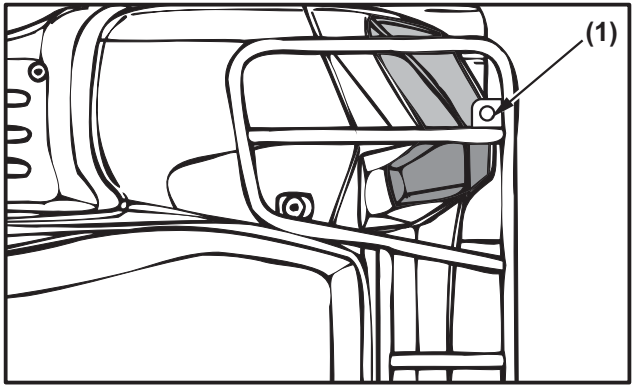

(1) Flag pole bracket

TRAILER HITCH

The trailer hitch is located on the rear axle housing. To use the hitch, you will need proper size ball as specified by the trailer manufacturer.

To attach the ball and properly hook up a trailer, follow the trailer manufacturer's instructions. For load limits and operational guidelines, see page 71.

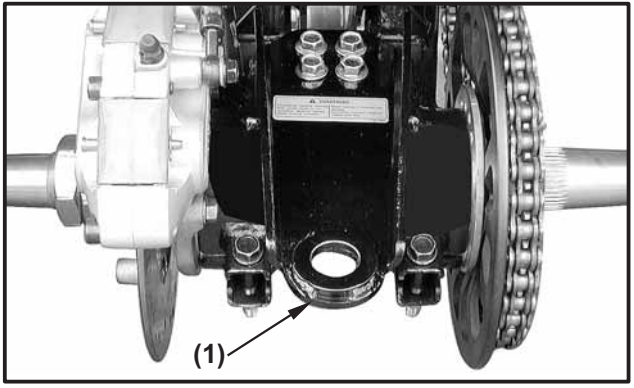

(1) Trailer

STORAGE COMPARTMENT

The storage compartment is located under the seat. To remove the seat, see page 42.
The owner's manual should be stored in the storage compartment.

Be careful not to flood this area when washing your ATV or riding through water, and never put any electric conduction material in the storage compartment.

(1) Owner's manual

ACCESSORY SOCKET SEAT

The accessory socket is optional equipment available from your KYMCO dealer.
The accessory socket's rated capacity is DC 12V, 10Watts (0.8A) or less.

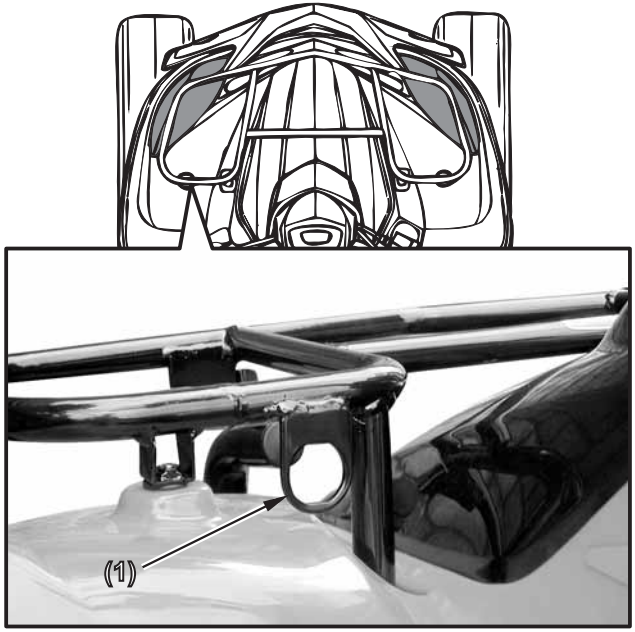

(1) Accessory socket seat

CAUTION:

- Do not plug in any heat-generating accessory such as an automobile cigarette lighter because it can damage the socket.
- Do not add electrical equipment that will exceed the accessory socket capacity, otherwise you may blow the fuse (0.8A) in the accessory socket.
- Using non-KYMCO accessory socket may drain the battery or blow a fuse in this ATV's electrical system.
- Be carful not to flood this accessory socket when washing your ATV.

When you have done using an accessory, unplug it, and cover the socket with cap.

The accessory socket connector is located under left side of front fender.

If the accessory socket is not equipped, always plug the connector with the plug.

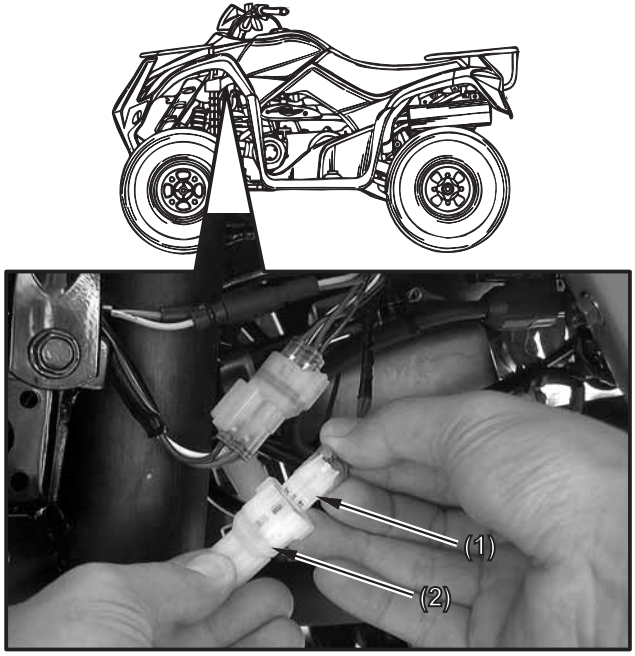

(1) Connector (2) Plug

PRE-OPERATION CHECKS

Before using this machine, check the following points:

ITEM	ROUTINE	PAGE
DRIVE SELECT LEVER	• Check the lever for proper operation.	47～51
BRAKE	• Check operation, condition, and brake fluid level. • Fill with DOT 4 brake fluid if necessary.	51～52, 118～122
FUEL	• Check fuel level. • Fill with fuel if necessary.	52～53
ENGINE OIL, TRANSMISSION OIL AND REAR FINAL GEAR CASE OIL	• Check oil level. • Fill with oil if necessary.	54, 103～110
DRIVE CHAIN	• Check chain slack and condition. • Adjust if necessary.	55, 125～127
THROTTLE	• Check for proper throttle cable operation.	55
WHEELS AND TIRES	• Check tire pressure, wear and damage.	56～58, 129
FITTINGS AND FASTENERS	• Check all fitting and fasteners.	55
SWITCHES	• Check for proper function.	55
LIGHTS	• Check for proper operation.	55, 131
COOLANT	• Check coolant leakage. • Fill with coolant if necessary.	58～59, 123～124

⚠ WARNING

POTENTIAL HAZARD

Failure to inspect the ATV before operating.
Failure to properly maintain the ATV.

WHAT CAN HAPPEN

Increases the possibillty of an accident or equipment damage.

HOW TO AVOID THE HAZARD

Always inspect your ATV each time you use it to make sure the ATV is in safe operating condition.
Always follow the inspection and maintenance procedures and schedules described in the Owner's Manual.

DRIVE SELECT LEVER

CAUTION:

Before shifting, you must stop the machine and return the throttle lever to its closed position until the engine speed to the specified idling speed. Otherwise, the transmission may be damaged.

Check operation of the lever before start the engine.

1. Make sure moving the shift lever into the "N" position of the shift guide.
2. Turn the ignition switch to "ON" and check the neutral indicator lamp comes on.
3. If the neutral indicator lamp does not come on, then see page 49~51 for adjustment.

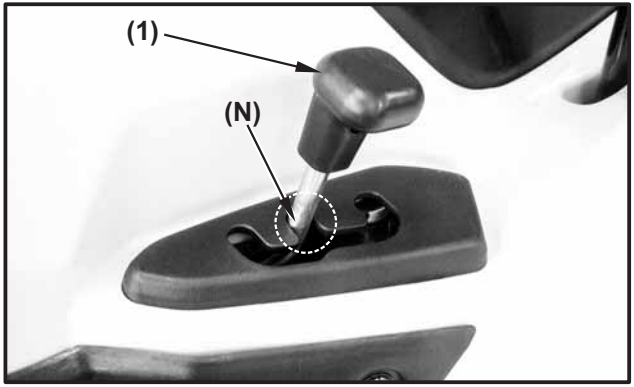

(1) Drive select lever

(N) Neutral

⚠ WARNING

POTENTIAL HAZARD

Operating with improperly adjusted drive select lever.

WHAT CAN HAPPEN

You may lose control of the gear shifting, which lead to accident.

HOW TO AVOID THE HAZARD

Make sure moving the shift lever into the "N" position and neutral indicator lamp comes on before start the engine.

Drive select lever adjustment

1.Turn the ignition switch is ON and make sure the engine stop.

2.Remove 6 screws/nuts, 4 bolts and the right footboard.

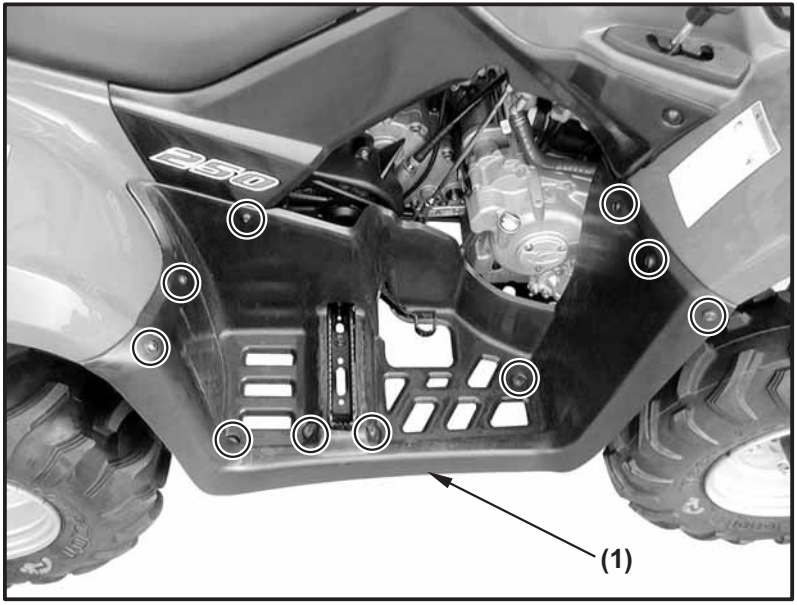

(1) Right footboard

3.Loosen the locknuts (1) of rod (2).
Shift the gear to neutral by moving the shift lever and/or turn the rod. (The neutral indicator lamp comes on.)

4.Provide standard/phillips screwdriver (3) (tool kit) and pass the standard/phillips screwdriver through the shift arm (4) into the index hole (5) at the transmission case cover.

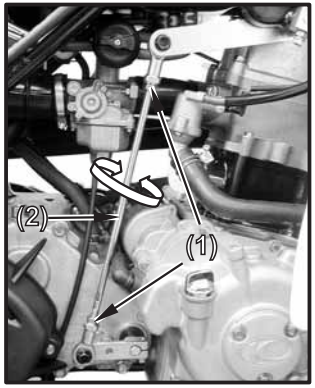

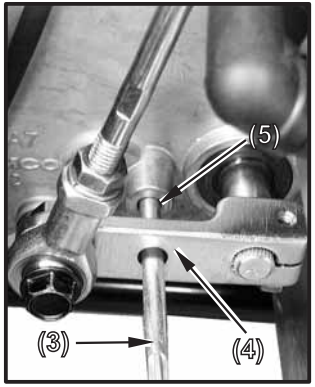

(1) Locknuts
(2) Rod
(3) Standard/phillips screwdriver (tool kit)
(4) Shift arm
(5) Index hole

5.Turn the rod (2) clockwise or counterclockwise until the drive select lever (6) into the "N" position of the shift guide and tighten the locknuts, then pull out the standard/phillips screwdriver.

6.After adjustment, start the engine and test ride the ATV to be sure the drive select lever is operating properly. (See page 64~66.)

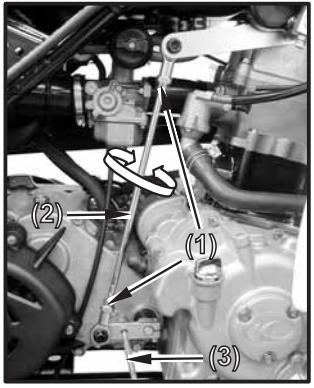

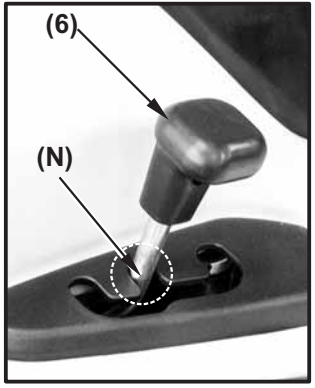

(1) Locknuts
(2) Rod
(3) Standard/phillips screwdriver
(6) Drive select lever
(N) Neutral

FRONT AND REAR BRAKES

1. Make sure there is no brake fluid leakage.

2. Check operation of the levers and pedal. They should move smoothly and there should be a firm feeling when the brake is applied. If not, have the machine inspected by a KYMCO dealer.

3. Brake operation
   Test the brakes at slow speed after starting out to make sure they are working properly. If the brakes do not provide proper braking performance, inspect the brakes for wear. (See page 118~122.)

⚠ WARNING

POTENTIAL HAZARD

Riding with improperly operating brakes.

WHAT CAN HAPPEN

You could lose braking ability, which could lead to an accident.

HOW TO AVOID THE HAZARD

Always check the brakes at the start of every ride. Do not ride the ATV if you find any problem with the brakes. If a problem cannot be corrected by the adjustment procedures provided in this manual, have the ATV inspected by a KYMCO dealer.

FUEL

Fill the fuel tank when necessary and make sure there is sufficient gasoline in the tank.

Check for leaks.

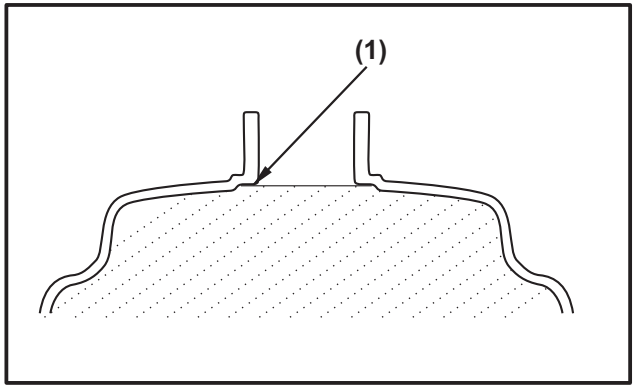

(1) Fuel neck

Recommended fuel:

UNLEADED FUEL

Fuel tank capacity:

Total: 12.5L(2.64 Imp gal, 3.19 US gal)

Reserve: 1.8L(0.38 Imp gal, 0.46 US gal)

Your KYMCO engine has been designed to use regular unleaded gasoline with a pump octane number of 86 or higher, or research octane number of 91 or higher. If knocking or pinging occurs, use a different brand of gasoline or premium unleaded fuel. Unleaded fuel will give you longer spark plug life and reduced maintenance cost.

Use unleaded fuel only because it produces fewer engine and spark plug deposits and extends the life of the exhaust system. Never use stale or contaminated gasoline or an oil/gasoline mixture.

Avoid getting dirt, dust or water in the fuel tank.

⚠ WARNING

POTENTIAL HAZARD

Improper care when refueling.

WHAT CAN HAPPEN

Fuel can spill, which can cause a fire and severe injury.

Fuel expands when it heats up. If the fuel tank is overfilled, fuel could spill out due to heat from the engine.

HOW TO AVOID THE HAZARD

Do not overfill the fuel tank. Be careful not to spill fuel, especially on the engine or exhaust pipe. Wipe up any spilled fuel immediately. Be sure the fuel tank cap is closed securely.

Do not refuel right after the engine has been running and is still very hot.

ENGINE, TRANSMISSION OIL AND REAR FINAL GEAR CASE OIL

Make sure the engine, transmission oil and rear final gear case oil at the specified level. Add oil as necessary. (See page 103~110.)

Check for leaks.

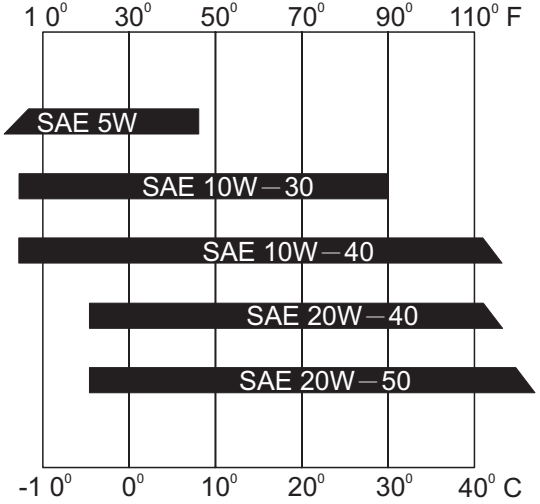

Recommended engine/transmission oil classification: API Service SE, SF, SG type or higher

CAUTION:

Be sure to use motor oils that do not contain anti-friction modifiers. Passenger car motor oils (often labeled "Energy Conserving") contain anti-friction additives which will cause starter clutch slippage, resulting in reduced component life and poor engine performance.

Oil quantity:

Engine oil:

Periodic oil change:
1.4L (1.23 Imp qt, 1.47US qt)

Total amount:
1.6L (1.41 Imp qt, 1.68US qt)

Transmission oil (MXU 250):

Periodic oil change:
0.3L (0.26 Imp qt, 0.32US qt)

Total amount:
0.4L (0.35 Imp qt, 0.42US qt)

Transmission oil (MXU 300):

Periodic oil change:
0.5L (0.43 Imp qt, 0.53US qt)

Total amount:
0.6L (0.52 Imp qt, 0.64US qt)

Rear final gear case oil (MXU 300):

Periodic oil change:
0.18L (6.4 Imp oz, 6 US oz)

Total amount:
0.2L (7.1 Imp oz, 6.7 US oz)

CHAIN

Check the general condition of the chain and check the chain slack before every ride. Lubricate and adjust the chain as necessary. (See pages 125~127 for details.)

THROTTLE LEVER

Check to see that the throttle lever operates correctly. It must open smoothly and spring back to idle position when released. Repair as necessary for proper operation.

FITTINGS AND FASTENERS

Always check the tightness of chassis fittings and fasteners before a ride. Take the machine to a KYMCO dealer or refer to the Service Manual for correct tightening torque.

LIGHTS

Check the headlight and taillight to make sure they are in working condition. Repair as necessary for proper operation.

SWITCHES

Check the operation of the headlight switch, engine stop switch and any other switches. Repair as necessary for proper operation.

TIRES

⚠ WARNING

POTENTIAL HAZARD

Operating this ATV with improper tires, or with improper or uneven tire pressure.

WHAT CAN HAPPEN

Use of improper tires on this ATV, or operation of this ATV with improper or uneven tire pressure, may cause loss of control, increasing your risk of accident.

HOW TO AVOID THE HAZARD

1. The tires listed below have been approved by Kwang Yang Motor Co., Ltd. for this model. Other tire combinations are not recommended.

	Size	Type
Front	22X7-10	Tubeless
Rear	22X10-10	Tubeless

2. The tires should be set to the recommended pressure:

- **Recommended tire pressure**

  Front 25~32 kpa (0.25~0.32 kgf/cm^2, 3.5~4.5 psi)

  Rear 25~32 kpa (0.25~0.32 kgf/cm^2, 3.5~4.5 psi)
- **Check and adjust tire pressures when the tires are cold.**
- **Tire pressures must be equal on both sides.**

3. Tire pressure below the minimum specified could cause the tire to dislodge from the rim under severe riding conditions.

The following are minimums:

Front 25 kpa (0.25 kgf/cm^2, 3.5 psi)

Rear 25 kpa (0.25 kgf/cm^2, 3.5 psi)

4. Higher pressures may cause the tire to burst. Inflate the tires very slowly and carefully. Fast inflation could cause the tire to burst.

Set pressure tires cold.

Set tire pressures to the following

	Recommended pressure	Minimum	Maximum
Front	28 kpa (0.28 kgf/cm², 3.92 psi)	25 kpa (0.25 kgf/cm², 3.5 psi)	32 kpa (0.32 kgf/cm², 4.5 psi)
Rear	28 kpa (0.28 kgf/cm², 3.92 psi)	25 kpa (0.25 kgf/cm², 3.5 psi)	32 kpa (0.32 kgf/cm², 4.5 psi)

How to measure tire pressure

Use the low-pressure tire gauge. (Tool kit)

NOTE:

The low-pressure tire gauge is included as standard equipment. Make two measurements of the tire pressure and use the second reading. Dust or dirt in the gauge could cause the first reading to be incorrect.

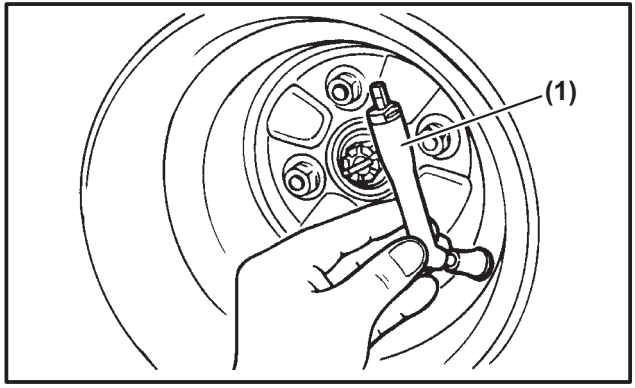

(1) Low-pressure tire gauge

Tire wear limit

When the tire groove decreases to 3 mm (0.12 in) due to wear, replace the tire.

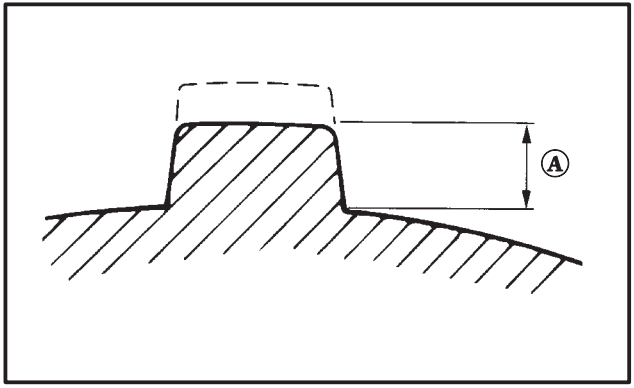

A. Standard: 3mm (0.12 in)

COOLANT

Check the coolant level in the reservoir tank when the engine is cold. (The coolant level will vary with engine temperature.) The coolant level is satisfactory if it is between the "FULL" and "LOW" marks on the tank. If the coolant level is at or below the "LOW" level, add tap water (soft water) to bring the level up to "FULL". Change the coolant every two years. (See page 123~124 for details.)

CAUTION:

Hard water or salt water is harmful to the engine. You may use distilled water if rou can not get soft water.

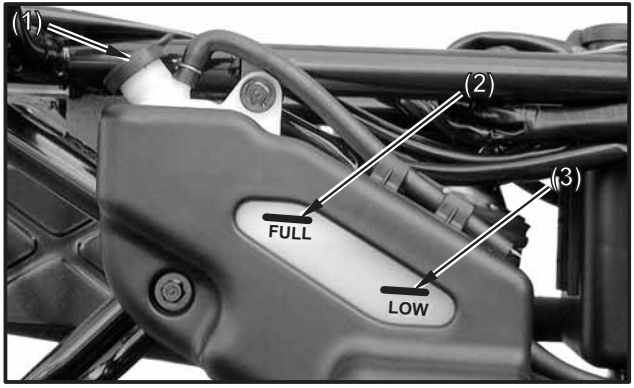

(1) Coolant reservoir cap
(2) Maximum level mark
(3) Minimum level mark

⚠ WARNING

POTENTIAL HAZARD
Removing the radiator cap when the engine and radiator are still hot.

WHAT CAN HAPPEN
You could be burned by hot fluid and steam blown out under pressure.

HOW TO AVOID THE HAZARD
Wait for the engine to cool before removing the radiator cap. Always use a thick rag over the cap. Allow any remaining pressure to escape before completely removing the cap.
Should be serviced by your authorized KYMCO dealer when changing the coolant.

⚠ WARNING

POTENTIAL HAZARD
Operating ATV without being familiar with all controls.

WHAT CAN HAPPEN
Loss of control, which could cause an accident or injury.

HOW TO AVOID THE HAZARD
Read the Owner's Manual carefully. If there is a control or function you do not understand, ask your KYMCO dealer.

STARTING A COLD ENGINE

⚠ WARNING

POTENTIAL HAZARD
Freezing control cables in cold weather.

WHAT CAN HAPPEN
You could be unable to control the ATV, which could lead to an accident or collision.

HOW TO AVOID THE HAZARD
When riding in cold weather, always make sure all control cables work smoothly before you begin riding.

1. Set the parking brake and unlock the steering (take steering lock key out).
2. Turn the fuel lock to "ON".
3. Turn the ignition switch to "ON".
4. Shift the drive select lever to neutral.

NOTE:

- The engine can be started only when the drive select lever is in neutral.
- When the select lever is in neutral, the neutral indicator light should come on. If the light does not come on, ask a KYMCO dealer to inspect it.

5. Use the choke knob in reference to the figure:

Position ①:Cold engine start-ambient temperature below 5°C (40°F).

Position ②:Cold engine start-ambient temperature at 0°C (30°F)~30°C(90°F) and warming up position.

Position ③:Cold engine start-ambient temperature above 25°C(80°F) and warm engine start position.

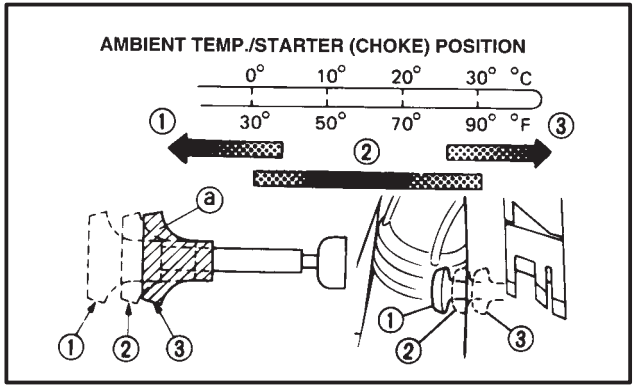

1. Fully open
2. Half open
3. Closed
a. Choke knob

6. Completely close the throttle lever and start the engine by pushing the start switch.

NOTE:

If the engine fails to start, release the start switch, then push the start switch again. Each cranking should be as short as possible to preserve battery energy. Do not crank the engine more than 10 seconds on each attempt.

7. If the engine is started with the choke knob in position 1, the choke knob should be returned to position 2 to warm up the engine. If the engine is started with the choke knob in position 2, keep the choke knob in this position to warm up the engine.
8. Continue warming up the engine until it idles smoothly and return the choke knob to position 3 before riding.

Using the recoil starter

The recoil starter is used to start the engine when the battery is low.

(1) Recoil starter

To start the engine without the electric starter:

1. Follow steps 1 through 5.
2. With the throttle closed turning starter grip counterclockwise to unlock and grasp the starter grip firmly, then pull it out slowly until it seats lightly.
3. Pull the grip up briskly and fully.
4. After the engine starts, allow the starter grip to return slowly and turning it clockwise to lock.

NOTE:

Do not allow water enter the v-belt compartment, always lock the recoil starter.

5. Follow steps 7 through 8.

CAUTION:

See the "engine break-in" section prior to operating engine for the first time.

STARTING A WARM ENGINE

To start a warm engine, refer to the "Starting a cold engine" section. The choke knob should not be used. The throttle should be opened slightly.

WARMING UP

To get maximum engine life, always warm up the engine before starting off. Never accelerate hard with a cold engine! To see whether or not the engine is warm, check if it responds to the throttle normally with the choke knob turned off.

DRIVE SELECT LEVER OPERATION AND REVERSE DRIVING

CAUTION:

Before shifting, you must stop the machine and return the throttle lever to its closed position until the engine speed to the specified idling speed. Otherwise, the transmission may be damaged.

1.Shifting :

forward (MXU 250)

A. Bring the machine to a complete stop and return the throttle lever to the closed position.

B. Apply the parking brake.

NOTE:

If the drive select lever is shifted into forward or reverse while the engine is running, the engine will stop unless the parking brake is applied.

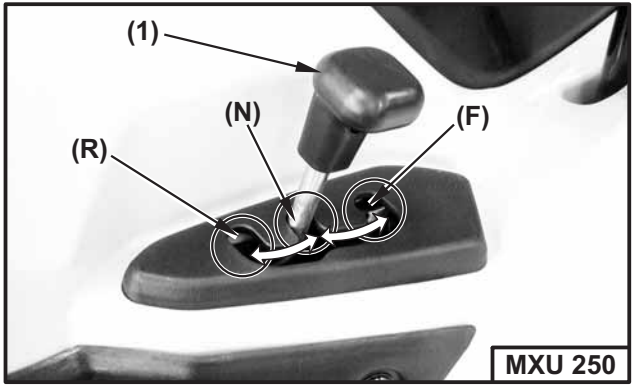

(1) Drive select lever (N) Neutral

(F) Forward (R) Reverse

C. Shift the gear from neutral to forward by moving the shift lever along the shift guide.

NOTE:

Make sure that the lever is completely shifted into position.

D. Open the throttle lever gradually.

forward (MXU 300)

A. Bring the machine to a complete stop and return the throttle lever to the closed position.

B. Apply the parking brake.

NOTE:

If the drive select lever is shifted into forward or reverse while the engine is running, the engine will stop unless the parking brake is applied.

C. Shift the gear from neutral to forward (in high or low gear) by moving the shift lever along the shift guide.

CAUTION:

Before shifting, you must stop the machine and return the throttle lever to its closed position until the engine speed to the specified idling speed. Otherwise, the transmission may be damaged.

NOTE:

Make sure that the lever is completely shifted into position.

D. Open the throttle lever gradually.

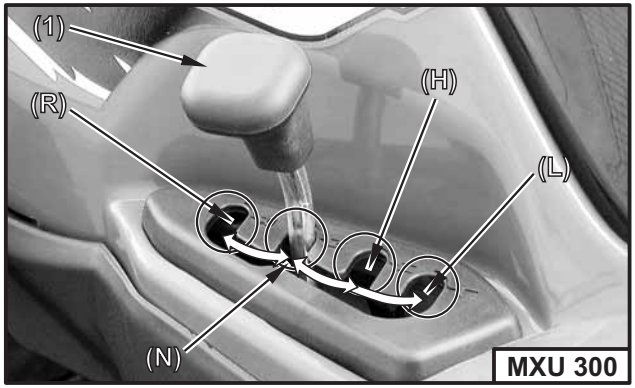

(1) Drive select lever

(R) For reverse drive

(N) Neutral

(H) For forward drive in high gear

(L) For forward drive in low gear

2.Shifting: reverse

A. Bring the machine to a complete stop and return the throttle lever to the closed position.

B. Apply the parking brake.

C. Shift the gear from neutral to reverse and by moving the shift lever along the shift guide.

NOTE:

When in reverse, the reverse indicator light should be on. If the light does not come on, ask a KYMCO dealer to inspect the machine.

D. Check behind for people or obstacles, then release the parking brake.

E. Open the throttle lever gradually and continue to watch to the rear while backing.

NOTE:

If the drive select lever is shifted into forward or reverse while the engine is running, the engine will stop unless the parking brake is applied.

⚠ WARNING

POTENTIAL HAZARD

Improperly operation in reverse.

WHAT CAN HAPPEN

You could hit an obstacle or person behind you, resulting in serious injury.

HOW TO AVOID THE HAZARD

When you shift into reverse, make sure there are no obstacles or people behind you. When it is safe to proceed, go slowly.

ENGINE BREAK-IN

There is never a more important period in the life of your machine than the period between zero and 20 hours.

For this reason, we ask that you carefully read the following material. Because the engine is brand new, you must not put an excessive load on it for the first 20 hours, the various parts in the engine wear and polish themselves to the correct operating clearances.

During this period, prolonged full throttle operation or any condition which might result in excessive engine heating must be avoided. However, momentary (2~3 seconds maximum) full throttle operation under load does not harm the engine.

Each full throttle acceleration sequence should be followed with a substantial rest period for the engine by cruising at lower r/min so the engine can rid itself of the temporary build up of heat.

If any abnormality is noticed during this period, consult a KYMCO dealer.

1. 0~10 hours:
   Avoid continuous operation above half throttle. Allow a cooling off period of five to ten minutes after every hour of operation. Vary the speed of the machine from time to time. Do not operate it at full throttle position.

2. 10~20 hours:
   Avoid prolonged operation above 3/4 throttle. Rev the machine freely through the gears but do not use full throttle at any time.

3. After break-in
   Avoid prolonged full throttle operation. Vary speeds occasionally.

PARKING

When parking, stop the engine and shift into neutral. Turn the fuel lock to "OFF" and apply the parking brake.

The front brake lever has three locked position that allow it to be used as a parking brake.

To set the parking brake, see page 36.

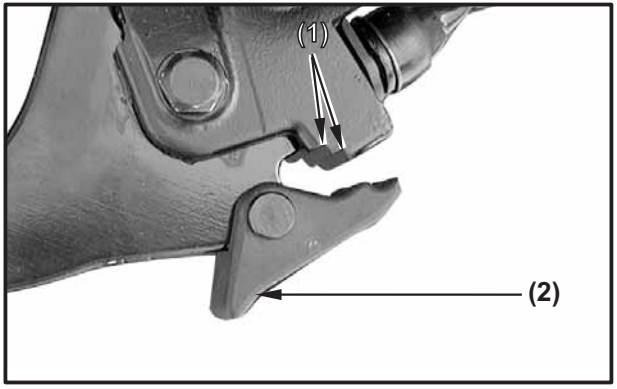

(1) Locked position
(2) Lock lever

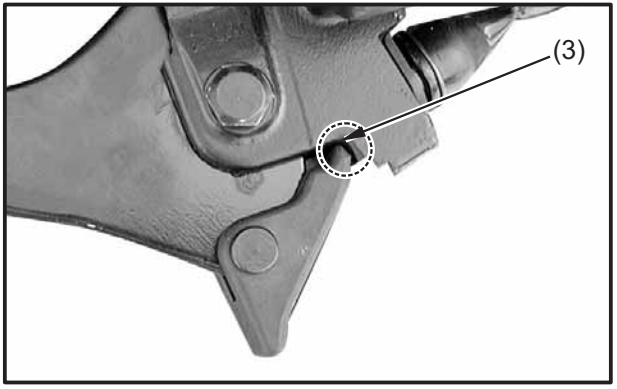

(3) Certainly locked position

Parking on a slope

⚠ WARNING

POTENTIAL HAZARD
Parking on a slope or other incline.

WHAT CAN HAPPEN
The ATV could roll out of control, increasing the chance of an accident.

HOW TO AVOID THE HAZARD
Avoid parking on slope or other inclines. If you must park on an incline, place the machine transversely across the incline, apply the parking brake, and block the front and rear wheels with rocks or other objects. Do not park the ATV at all on slope that are so steep you could not walk up them easily.

1. Bring the machine to a stop by applying the brakes.
2. Stop the engine.
3. With the brake applied, apply the parking brake.

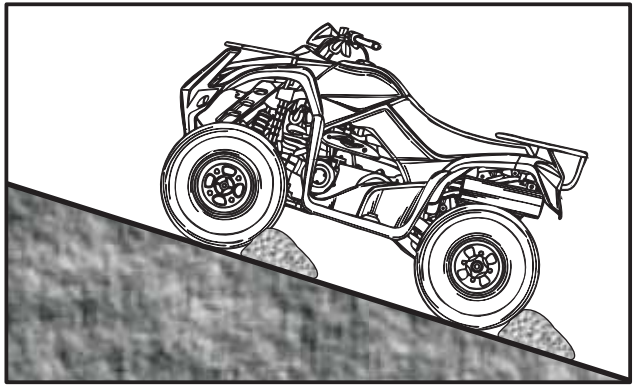

ACCESSORIES

Accessories can affect the handling and control of your ATV. Keep the following in mind when considering an accessory or operating an ATV which has accessories.

- Choose only accessories designed for your ATV. Your KYMCO dealer has a variety of genuine KYMCO accessories. Other accessories may also be available on the market. However, it is not possible for KYMCO to test all non-KYMCO accessories, nor have any control over the quality or suitability of them. Choose a genuine KYMCO accessory, or one that is equivalent in design and quality.
- Accessories should be rigidly and securely mounted. An accessory which can shift position or come off while you are riding could affect your ability to control the ATV.
- Do not mount an accessory where it could interfere with your ability your to control the ATV. Examples include (but are not limited to) a heavy or bulky object attached to the handlebars which could make steering difficult, an accessory that limits your ability to move around on the seat, or one that limits your view.
- Use extra caution when riding an ATV with accessories. The ATV may handle differently than it does without accessories.

LOADING

As originally equipped, this ATV can carry cargo or tow a trailer, you must use common sense and good judgment. Keep the following points in mind:

- Never exceed the weight limit shown. An overloaded ATV can be unstable.
- **Maximum load**
  Rear cargo rack: 30 kg (66 lbs)
  Front cargo rack: 20 kg (44 lbs)
- **Trailer**
  Maximum towing capacity: 150 kg (331 lbs)
  Tongue weight: 14kg (30 lbs)

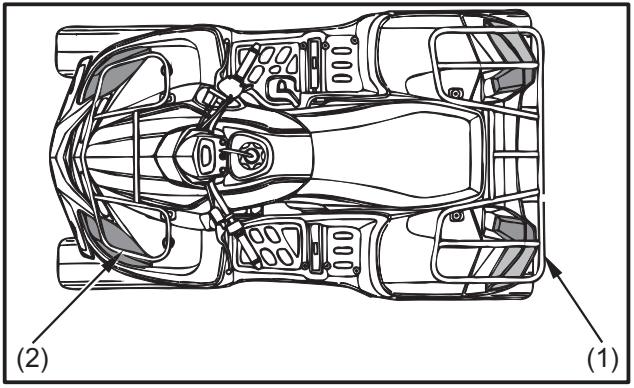

(1) Rear cargo rack (2) Front cargo rack

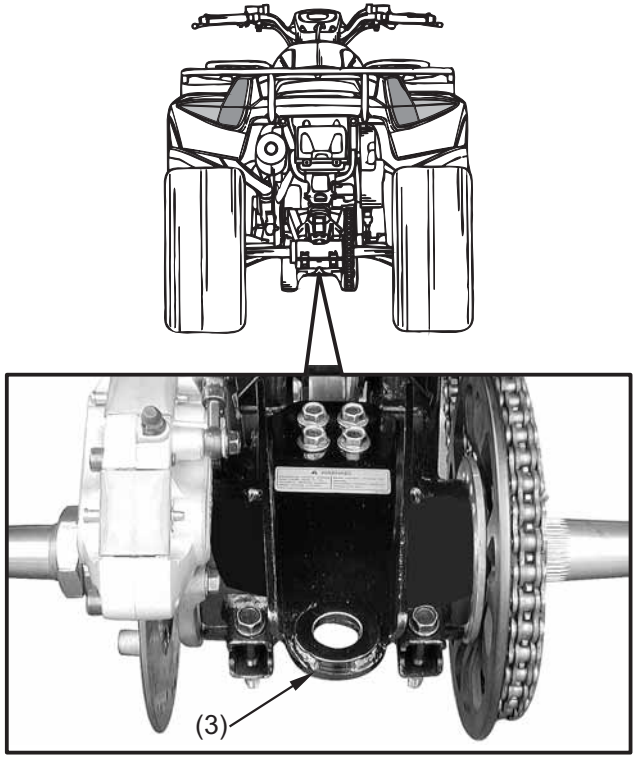

(3) Trailer

- Load cargo on the cargo racks as close to the center of the vehicle as possible. Put cargo at the rear of the front cargo rack and at the front of the rear cargo rack. Center the load from side to side.
- Tie down cargo securely to the carriers. Make sure cargo in the trailer cannot move around.
- A shifting load can cause an accident.
- Make sure the load does not interfere with controls or your ability to see where you are going.
- Ride more slowly than you would without a load. The more weight you carry, the slower you should go.
- Allow more braking distance. A heavier vehicle takes longer to stop.
- Avoid making sharp turns unless at very slow speeds.
- Avoid hills and rough terrain. Choose terrain carefully. Added weight affects the stability and handling of the ATV.
- Never carry passenger on the cargo racks.

⚠ WARNING

POTENTIAL HAZARD

Overloading this ATV or carrying or towing cargo improperly.

WHAT CAN HAPPEN

Could cause changes in vehicle handling which could lead to an accident.

HOW TO AVOID THE HAZARD

Never exceed the stated load capacity for this ATV.

Cargo should be properly distributed and securely attached.

Reduce speed when carrying cargo or pulling a trailer. Allow greater distance for braking.

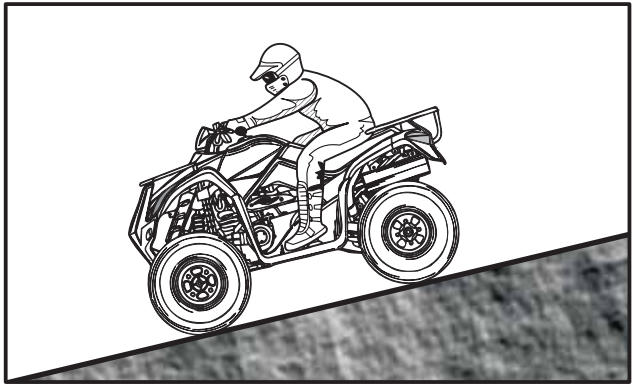

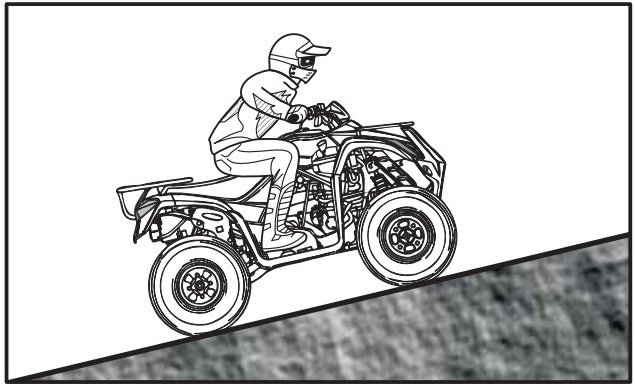

RIDING YOUR ATV

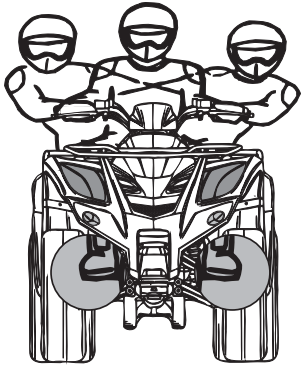

⚠ WARNING

Indicates a potential hazard that could result in serious injury or death.

GETTING TO KNOW YOUR ATV

This ATV is for recreation and utility use. This section, riding your ATV, provides general ATV riding instructions for recreational riding. The skills and techniques described in this section, however, are appropriate for all types of riding. Riding your ATV requires special skills acquired through practice over a period of time. Take the time to learn the basic techniques well before attempting more difficult maneuvers.

Riding your new ATV can be a very enjoyable activity, providing you with hours of pleasure. But it is essential to familiarize yourself with the operation of the ATV to achieve the skill necessary to enjoy riding safely. Before you begin to ride, be sure you have read this Own's Manual completely and understand the operation of the controls. Pay particular attention to the safety information on pages 5~9. Please also read all caution and warning labels on your ATV.

RIDE WITH CARE AND GOOD JUDGEMENT

Get training if you are inexperienced.
Beginners and inexperienced riders should get proper instruction on how to operate this ATV.

⚠ WARNING

POTENTIAL HAZARD
Operating this ATV without proper instruction.

WHAT CAN HAPPEN
The risk of an accident is greatly increased if the operator does not know how to operate the ATV properly in different situations and on different types of terrain.

HOW TO AVOID THE HAZARD
Become familiar with this ATV at slow speeds first, even if you are an experienced operator.
Do not attempt to operate at maximum performance until you are totally familiar with the machine's handling and performance characteristics.

Riding your machine requires skills acquired through practice over a period of time.
Take the time to learn the basic techniques well before attempting more difficult maneuvers.

Not recommended for children under 16 year of age.

⚠ WARNING

POTENTIAL HAZARD

Failure to follow the age recommendations for this ATV.

WHAT CAN HAPPEN

Use by children of ATVs that are not recommended for their age can lead to severe injury or death of the child.

HOW TO AVOID THE HAZARD

A child under 16 should never operate an ATV with engine size greater than 90cc.

Never carry passenger on the cargo racks.

⚠ WARNING

POTENTIAL HAZARD

Carrying a passenger on the cargo racks.

WHAT CAN HAPPEN

Greatly reduces your ability to balance and control this ATV. Could cause an accident, resulting in harm to you and/or your passenger.

HOW TO AVOID THE HAZARD

Never carry a passenger on the cargo racks. The cargo racks is to allow the operator to carry cargo. It is not for carrying passengers.

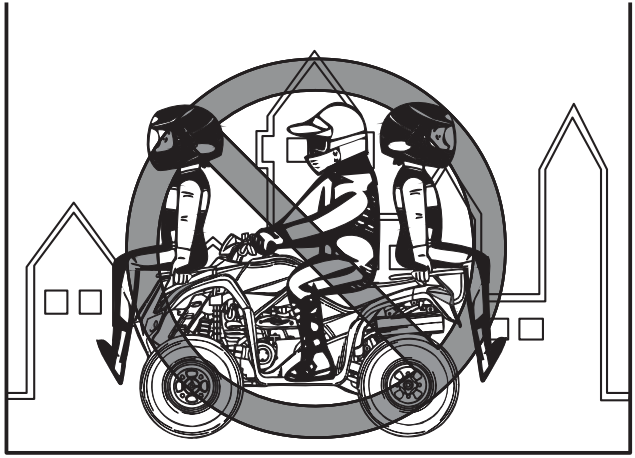

APPAREL

⚠ WARNING

POTENTIAL HAZARD

Operating this ATV without wearing an approved motorcycle helmet, eye protection and protective clothing.

WHAT CAN HAPPEN

Operating without an approved motorcycle helmet increases your chances of a severe head injury or death in the event of an accident.

Operating without eye protection can result in an accident and increases your chances of a severe injury in the event of an accident.

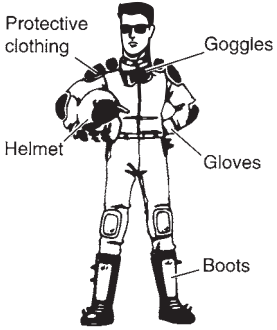

Operating without protective clothing increases your chances of severe injury in the event of an accident.

HOW TO AVOID THE HAZARD

Always wear an approved motorcycle helmet that fits properly.

You should also wear:

- **eye protection(goggles or face shield)**
- **gloves**
- **boots**
- **long-sleeved shirt or jacket**
- **Long pants**

Do not operate after consuming alcohol or drugs.

Operator's performance capability is reduced by the influence of alcohol or drugs.

⚠ WARNING

POTENTIAL HAZARD

Operating this ATV after consuming alcohol or drugs.

WHAT CAN HAPPEN

Could seriously affect your judgment.
Could cause you to react more slowly.
Could affect your balance and perception.
Could result in an accident.

HOW TO AVOID THE HAZARD

Never consume alcohol or drugs before or while driving this ATV.

PRE-OPERATION CHECKS

Always perform the pre-operation checks listed on page 46 before riding for safety and proper care of the machine.

⚠ WARNING

POTENTIAL HAZARD

Failure to inspect the ATV before operating.

Failure to properly maintain the ATV.

WHAT CAN HAPPEN

Increases the possibility of an accident or equipment damage.

HOW TO AVOID THE HAZARD

Always inspect tour ATV each time you use it to make sure the ATV is in safe operating condition.

Always follow the inspection and maintenance procedures and schedules described in the Owner's Manual.

⚠ WARNING

POTENTIAL HAZARD

Operating this ATV with improper tires, or with improper or uneven tire pressure.

WHAT CAN HAPPEN

Use of improper tires on this ATV, or operation of this ATV with improper or uneven tire pressure, may cause loss of control, increasing your risk of an accident.

HOW TO AVOID THE HAZARD

Always use the size and type tires specified in the Owner's Manual for this vehicle on pages 56~58.

Always maintain proper tire pressure as described in the Owner's Manual on page57.

Do not operate at speeds too fast your skills or the conditions.

⚠ WARNING

POTENTIAL HAZARD

Operating this ATV at speeds too fast for your skills or the conditions.

WHAT CAN HAPPEN

Increases your chances of losing control of the ATV, which can result in an accident.

HOW TO AVOID THE HAZARD

Always go at a speed that is proper for the terrain, visibility and operating conditions, and your experience.

Speed limiter

For riders inexperienced with this model, this model is equipped with a speed limiter in the throttle lever housing. The speed limiter limits the power and top speed of the machine.

Turning the screw in decreases top speed, and turning it out increases top speed.

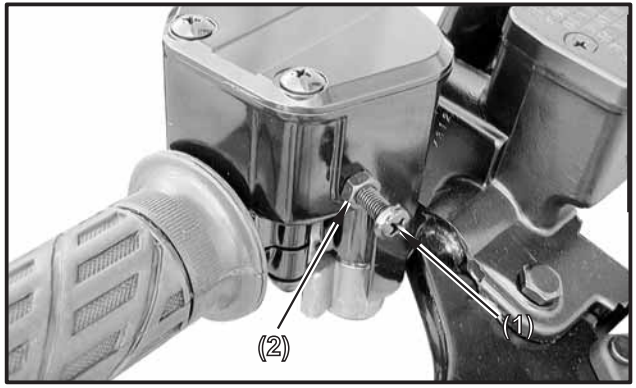

(1) Adjuster (2) Locknut

LOADING AND ACCESSORIES

Use extra caution when riding the machine with additional loads, such as accessories or cargo. The machine's handling may be adversely affected. Reduce your speed when adding additional loads.

MAXIMUM TOWING CAPACITY:
150kg (331 lbs)

TONGUE WEIGHT:
14kg (30 lbs)

MAXIMUM LOADING LIMIT:
REAR CARGO RACK: 30 kg (66 lbs)
FRONT CARGO RACK: 20 kg (44 lbs)

Loading and operational guidelines

Carrying cargo will affect how your ATV handles and greatly reduce its ability in accelerating, braking and making turns and other maneuvers.

Be sure to observe the weight limits and follow these guidelines:

1. Do not tow another vehicle.
2. Make sure all cargo is secured before riding.
3. Allow extra room for starting, stopping and turning whenever you carry cargo or pull a trailer.
4. Avoid riding on steep slopes when carrying cargo or pulling a trailer.
5. Never cross a slope when towing a trailer.

⚠ WARNING

POTENTIAL HAZARD

Overloading this ATV or carrying or towing cargo improperly.

WHAT CAN HAPPEN

Could cause changes in vehicle handling, stability and braking which could lead to an accident.

HOW TO AVOID THE HAZARD

Never exceed the stated load capacity for this ATV.

Cargo should be properly distributed and securely attached.

Reduce speed when carrying cargo or pulling a trailer. Allow greater distance for braking.

Always follow the instructions in your Owner's Manual for carrying cargo or pulling a trailer.

Accessories

Genuine KYMCO accessories have been specifically designed for and tested on this vehicle. Because KYMCO cannot test all other accessories, you are personally responsible for properly selecting, installing, and using non-KYMCO accessories. Always follow the loading instructions above, plus the following:

1. Carefully inspect the accessory to make sure it does not block any lights, reduce ground clearance, or limit suspension travel, steering travel, or other controls.
2. Make sure the accessory does not interfere with your ability to shift body position on the seat or operate hand and foot controls.
3. Do not add electrical equipment that will exceed the vehicle's electrical system capacity. A blown fuse could cause a loss of lights or engine power.

MODIFICATIONS

⚠ WARNING

POTENTIAL HAZARD

Operating this ATV with improper modifications.

WHAT CAN HAPPEN

Improper installation of accessories or modification of this vehicle may cause changes in handling which in some situations could lead to an accident.

HOW TO AVOID THE HAZARD

Never modify this ATV through improper installation or use of accessories. All parts and accessories added to this vehicle should be genuine KYMCO or equivalent components designed for use on this ATV and should be installed and used according to instruction. If you have question, consult an authorized ATV dealer.

No modifications

Modifying this ATV or removing original equipment may render the vehicle unsafe or illegal. Spark arresters and mufflers are required in most areas. Don't modify your exhaust system or emission control system components. Remember, excessive noise bothers everyone and creates a bad image for ATV.

DURING OPERATION

Always keep your feet on the footboards during operation. Otherwise your feet may contact the rear wheels.

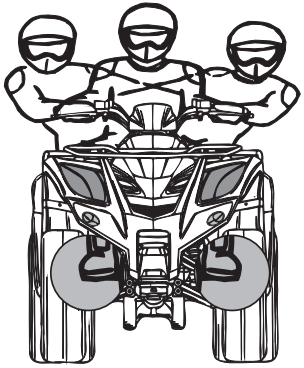

⚠ WARNING

POTENTIAL HAZARD

Removing hands from handlebars or feet from footboards during operation.

WHAT CAN HAPPEN

Removing even one hand or foot can reduce your ability to control the ATV or could cause you to lose your balance and fall a footpeg, your foot or leg may come into contact with the rear wheels, which could injure you or cause an accident.

HOW TO AVOID THE HAZARD

Always keep both hands on the handlebars and both feet on the footpegs of your ATV during operation.

Avoid wheelies and jumping. You may lose control of the machine or overturn.

⚠ WARNING

POTENTIAL HAZARD

Attempting wheelies, jumps, and other stunts.

WHAT CAN HAPPEN

Increases the chance of an accident, including an overturn.

HOW TO AVOID THE HAZARD

Never attempt stunts, such as wheelies or jumps. Don't try to show off.

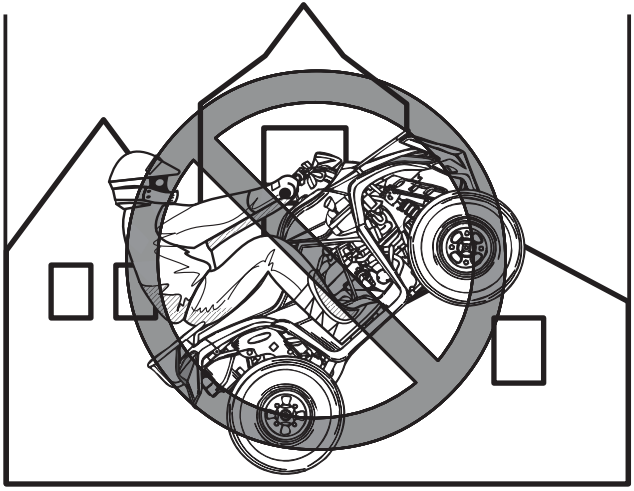

EXHAUST SYSTEM

The exhaust on the machine is very hot during and following operation. To prevent burns, avoid touching the exhaust system. Park the machine in a place where pedestrians or children are not likely to touch it.

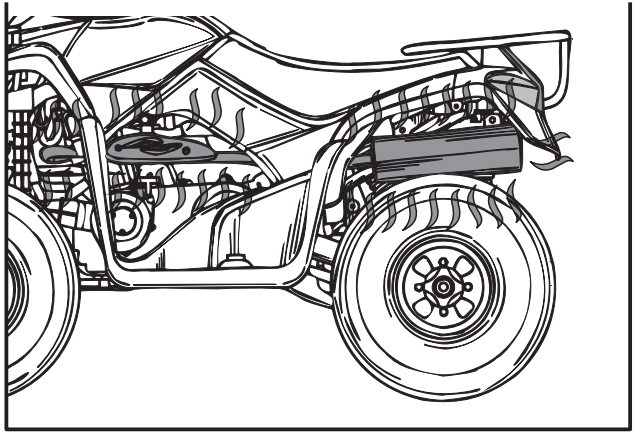

⚠ WARNING

POTENTIAL HAZARD

Hot exhaust system

WHAT CAN HAPPEN

Someone touching the exhaust system during or after operation could be burned.

HOW TO AVOID THE HAZARD

Do not touch the hot exhaust system.

Do not park the machine in a place where others might be likely to touch it.

PRACTICING

Select a flat area to become familiar with your ATV. Make sure that this area is free of obstacles and other riders. You should practice control of the throttle, brakes, shifting before trying more difficult terrain.

Always avoid riding on rough surfaces: the ATV is designed for on-road use only, and handling maneuvers are more difficult to perform on rough surfaces.

Set the parking brake and follow the instruction on page 60~63 to start the engine. Once it has warmed up you are ready to begin riding your ATV. Remember that the engine and exhaust pipe will be hot when riding and afterwards; do not allow skin or clothing to come in contact with these components.

With the engine idling, return the starter knob to the closed position and shift the drive select lever into the forward position. Then release the parking brake. Apply the throttle slowly and you will start to accelerate. If the throttle is applied too abruptly, the front wheels may lift off the ground resulting in a loss of directional control. Avoid higher speeds until you are thoroughly familiar with the operation of your ATV.

When slowing down or stopping, release the throttle and apply the brakes smoothly and evenly. Improper use of the brakes can cause the tires to lose traction, reducing control and increasing the possibility of an accident.

TURNING YOUR ATV

To achieve maximum traction while riding on-road, the two rear wheels are mounted solidly on one axle and turn together at the same speed. Therefore, unless the wheel on the inside of the turn is allowed to slip or lose some traction, the ATV will resist turning.

When approaching a corner or turn, close the throttle fully, and slow the ATV down by applying both front and rear brakes at the same time.

As you do so, put your weight on the footboard to the outside of the turn (opposite your desired direction) and lean your upper body into the turn. After completing the turn, open the throttle gradually to accelerate the ATV.

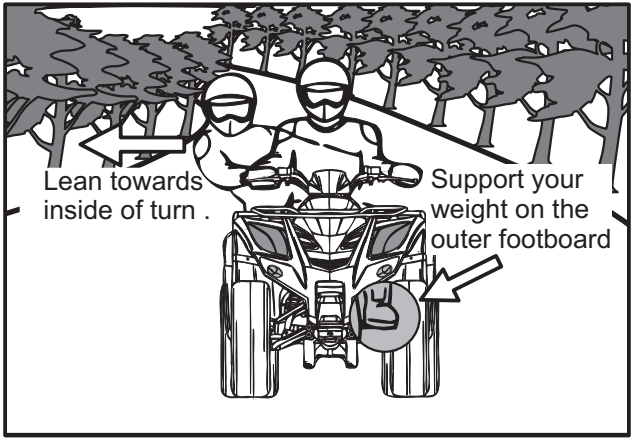

⚠ WARNING

POTENTIAL HAZARD

Turning improperly

WHAT CAN HAPPEN

ATV could go out of control, causing a collision or overturn.

HOW TO AVOID THE HAZARD

Always follow proper procedures for turning as described in this Owner's Manual.

Practice turning at low speeds before attempting to turn at faster speeds. Do not turn at speeds too fast for your skills or the conditions.

Do not turn at excessive speeds.

CLIMBING UP SLOPE

Use proper riding techniques to avoid vehicle overturns on slopes. Be sure that you can maneuver your ATV well on flat ground before attempting any incline and then practice riding first on gentle slopes. Try more difficult climbs only after you have developed your skill. In all cases avoid inclines with slippery or loose surfaces, or obstacles that might cause you to lose control.

⚠ WARNING

POTENTIAL HAZARD

Operating on excessively steep slopes.

WHAT CAN HAPPEN

The vehicle can overturn more easily on extremely steep slopes than on level surfaces or small slopes.

HOW TO AVOID THE HAZARD

Never operate the ATV on slopes too steep for the ATV or for your abilities.

Practice on smaller slopes before attempting large slopes.

It is important when climbing a slope to make sure that tour weight is transferred forward on the ATV. This can be accomplished by leaning forward, steeper inclines and standing on the footboards and leaning forward over the handlebars.

⚠ WARNING

POTENTIAL HAZARD
Climbing slopes improperly

WHAT CAN HAPPEN
Could cause loss of control or cause the ATV to overturn.

HOW TO AVOID THE HAZARD
Always follow proper procedures for climbing slopes as described in this Owner's Manual.
Always check the terrain carefully before you start up any slope.
Never climb slopels with excessively slippery or loose surfaces.
Shift your weight forward.
Never open the throttle suddenly.
The ATV could flip over backwards.
Never go over the top of any slope at high speed.

An obstacle or a sharp drop could be on the other side of the slope.

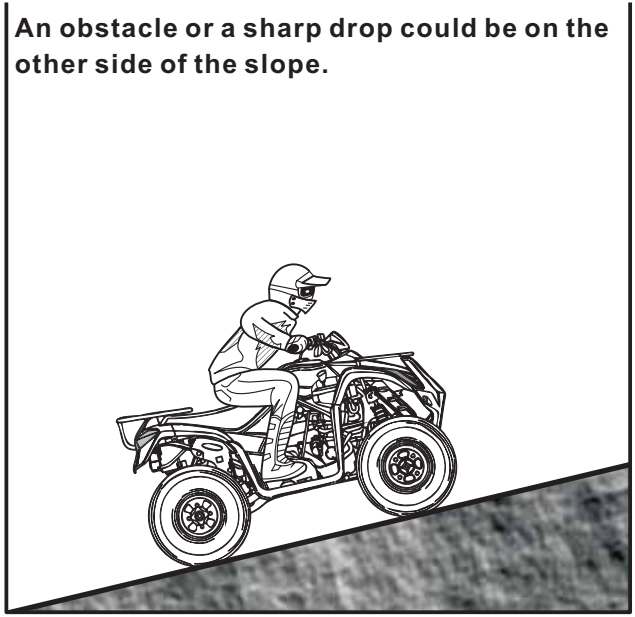

If you are climbing a slope and you find that you have not properly judged your ability to make it to the top, you should turn the ATV around while you still have forward motion (provided you have the room to do so) and go down the slope.

⚠ WARNING

POTENTIAL HAZARD
Improperly crossing slopes or turning on slopes.

WHAT CAN HAPPEN
Could cause loss of control or cause the ATV to overturn.

HOW TO AVOID THE HAZARD
Never attempt to turn the ATV around on any slope until you have mastered the turning technique as described in the Owner's Manual on level ground. Be very careful when turning on any slope.
Avoid crossing the side of a steep slope if possible.

When crossing the side of a slope:
Always follow proper procedures as described in the Owner's Manual.
Avoid slopes with excessively slippery or loose surfaces.
Shift your weight to the up of slope side of the ATV.

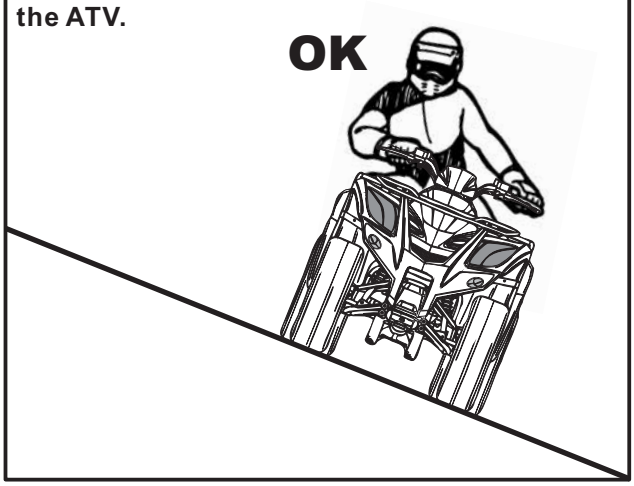

If your ATV has stalled or stopped and you believe you can continue up the slope, restart carefully to make sure you do not lift the front wheels which could cause you to lose control. If you are unable to continue up the slope, dismount the ATV on up slope side. Physically turn the ATV around and then descend the slope.

If you start to roll backwards, DO NOT use the rear brake to stop. The ATV could easily tip over backwards. Instead, dismount the ATV immediately on the up of slope side.

⚠ WARNING

POTENTIAL HAZARD
Stalling, rolling backwards or improperly dismounting while climbing a slope.

WHAT CAN HAPPEN
Could result in ATV overturning.

HOW TO AVOID THE HAZARD
Maintain steady speed when climbing a slope.

If you lose all forward speed:
Keep weight up slope.
Apply the brakes.
Lock parking brake, after you are stopped.

If you begin rolling backwards:
Keep weight up slope.
Never apply the rear brake while rolling backwards.

Apply the front brake.

When fully stopped, apply rear brake as well, and then lock parking brake.

Dismount on up slope side or to a side if pointed straight up slope. Turn the ATV around and remount, following the procedure described in the Owner's Manual.

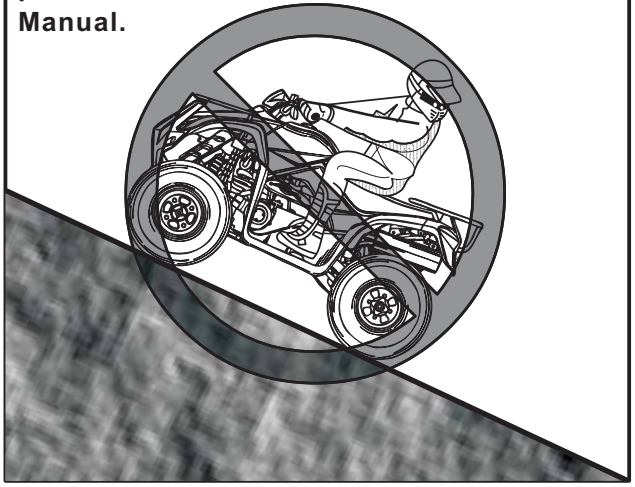

If the slope is not too steep and you have good footing, you may be able to walk the ATV back down the slope. Make sure your intended path is clear in case you lose control of the ATV. If you decide you can walk the ATV safely:

1. Stand with your body facing downslope, beside the vehicle so you can reach the front brake lever with your left hand.
2. Be sure your legs are clear of the wheels.
3. Check your footing.
4. Then slowly and carefully back the ATV down the slope using the front brake lever to control speed.
5. If you lose control of the ATV, for your safety, get away from the vehicle,

If the slope is too steep or too slippery, or if you have any doubt whether you can safely walk the ATV back down the slope, leave the vehicle where it is and get help. If possible, block the wheels so the vehicle won't roll backwards.

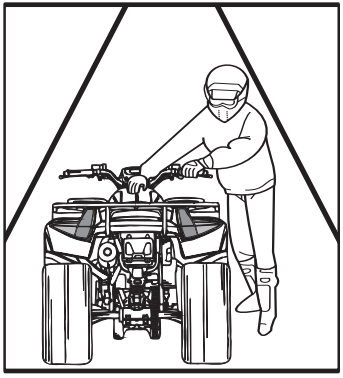

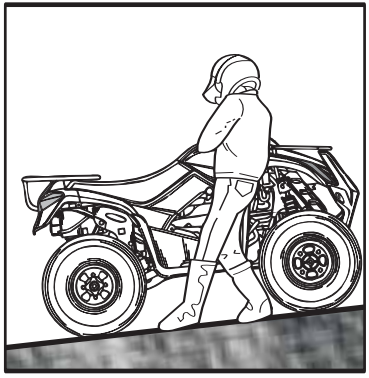

RIDING DOWN SLOPE

When riding your ATV down slope, shift your weight as far to the rear and up slope side of the ATV as possible. Move back on the seat and sit with your arms straight. Improper braking may cause a loss of traction.

Use caution while descending a slope with loose or slippery surfaces. Braking ability and traction may be adversely affected by these surfaces. Improper braking may also cause a loss of traction. Whenever possible, ride your ATV straight down slope. Avoid sharp angles which could allow the ATV to tip or roll over. Carefully choose your path and ride no faster than you will be able to react to obstacles which may appear.

⚠ WARNING

POTENTIAL HAZARD

Going down a slope improperly.

WHAT CAN HAPPEN

Could cause loss of control or cause the ATV to overturn.

HOW TO AVOID THE HAZARD

Always follow proper procedures for going down slopes as described in this Owner's Manual. Note: a special technique is required when braking as you go down a slope.

Always check the terrain carefully before you start down any slope.

Shift your weight backward.

Never go down a slope at high speed.

Avoid going down a slope at an angle that would cause the vehicle to lean sharply to one side. Go straight down the slope where possible.

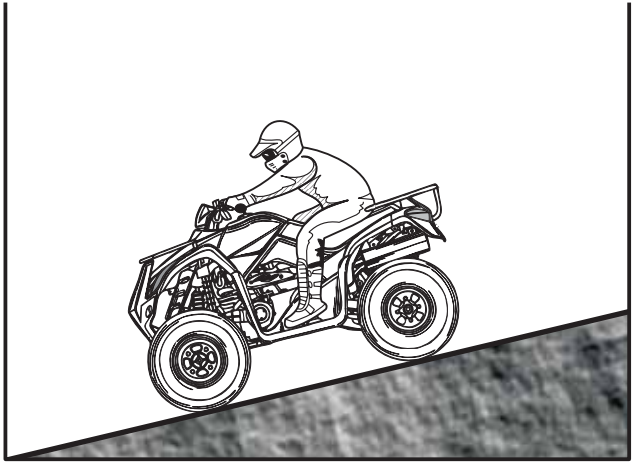

PARKING

Always choose a level place to park. After bringing your ATV to a stop, hold the brakes while you shift into neutral. Then set the parking brake and turn the ignition switch OFF. If you're through riding for the day, also turn the fuel valve OFF.

WHAT TO DO IF

This section is designed to be a reference guide only. Be sure to read each section on riding techniques completely.

WHAT TO DO....

If your ATV doesn't turn when you want it to:
Bring the ATV to a stop and practice the turning maneuvers again. Be sure you are putting your weight on the footboard to the outside of the turn. Position your weight over the front wheels for better control. (See pages 90.)

If your ATV can't make it up a slope you are trying to climb:
Turn the ATV around if you still have forward speed. If not, stop, dismount on the up slope side of the ATV and physically turn the ATV around. If the ATV starts to slip backwards DO NOT USE THE REAR BRAKE - the ATV may tip over on top of you. Dismount the ATV on the up slope side. (See pages 90~95.)

PERIODIC MAINTENANCE AND ADJUSTMENT

Periodic inspection, adjustment and lubrication will keep your machine in the safest and most efficient condition possible. Safety is an obligation of the machine owner. The most important points of machine inspection, adjustment and lubrication are explained on the following pages.

⚠ WARNING

POTENTIAL HAZARD

Servicing an engine while it is running.

WHAT CAN HAPPEN

Moving parts can catch clothing or parts of the body, causing injury.

Electrical components can cause shocks or can start fires.

HOW TO AVOID THE HAZARD

Turn off the engine when performing maintenance unless otherwise specified.

Have KYMCO dealer perform service if you are not familiar with machine service.

TOOL KIT

A tool kit is provide with your ATV.

You are recommended to put the tool kit in the vinyl bag and always carry them on the seat reverse side.

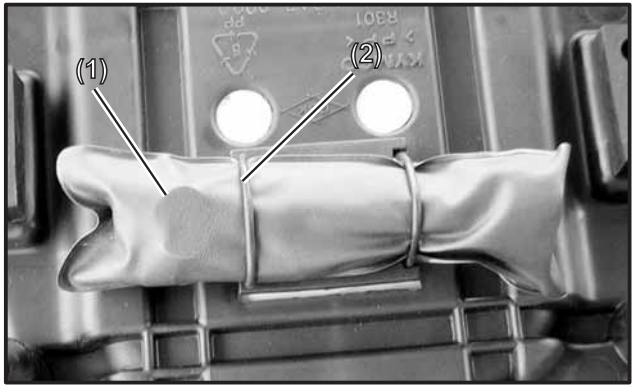

(1) Tool kit (2) Rubber band

The tools in the kit are sufficient to perform routine maintenance and simple repairs. Any extensive work requiring additional tools should be performed by your authorized KYMCO dealer.

The tool kit includes the following items:
(1) Air pressure gauge
(2) Spark plug wrench
(3) 10/12 mm wrench
(4) Standard/Phillips screwdriver
(5) Screwdriver handle
(6) Tool bag
(7) Rubber band

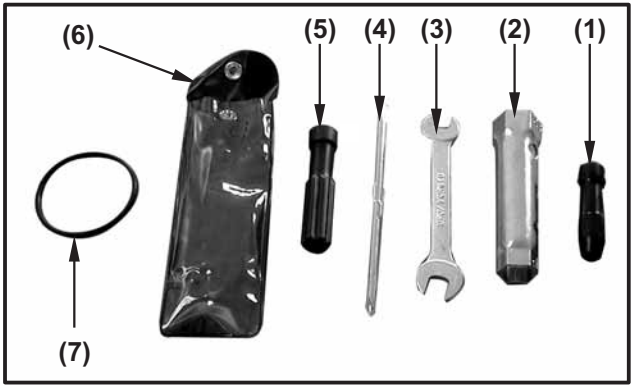

⚠ WARNING

POTENTIAL HAZARD
Operating this ATV with improper modifications.

WHAT CAN HAPPEN
Improper installation of accessories or modification of this vehicle may cause changes in handling which in some situation could lead to an accident.

HOW TO AVOID THE HAZARD
Never modify this ATV through improper installation or use of accessories. All parts and accessories added to this vehicle should be genuine KYMCO or equivalent components designed for use on this ATV and should be installed and used according to instructions. If you have questions, consult an authorized KYMCO dealer.

PERIODIC MAINTENANCE/LUBRICATION

ITEM	ROUTINE / WHICHEVER COMES FIRST		INITIAL	EVERY	
		mi	100	600	1200
		Km	150	1000	2000
		MONTH	1	6	12
Engine oil	•Replace (Warm engine before draining).		○	○	○
***Oil strainer**	•Clean. •Replace if necessary.		○	○	○
Transmission oil	•Check oil level/oil leakage •Replace every 12 months.		○		○
Rear final gear case oil	•Check oil level/oil leakage •Replace every 12 months.		○		○
***V-belt**	•Check operation. •Replace if damage or excessive wear.		○		○
Air filter element (for engine and *V-belt compartment)	•Clean. •Replace if necessary.	Every 20~40 hours (150~300km, 100~200mi) (More often in wet or dusty areas.)			
***Carburetor**	•Check idle speed/starter operation. •Adjust if necessary.		○	○	○
***Cylinder head cover breather system**	•Check breather hose for cracks or damage. •Replace if necessary.			○	○
Spark plug	•Check condition. •Adjust gap and clean. •Replace if necessary.		○	○	○
***Fuel line**	•Check fuel hose for cracks or damage. •Replace if necessary.			○	○
***Valves**	•Check valve clearance. •Adjust if necessary.		○	○	○
***Brake**	•Check operation and brake fluid. •Replace brake pad if necessary.		○	○	○

ITEM	ROUTINE / WHICHEVER COMES FIRST		INITIAL	EVERY	
		mi	100	600	1200
		Km	150	1000	2000
		MONTH	1	6	12
***Coolant**	•Check coolant leakage. •Replace if necessary. •Replace coolant every 24 months.		○	○	○
***Battery**	•Check specific gravity. •Check breather hose for proper operation. •Correct if necessary.		○	○	○
***Exhaust system**	•Check leakage. •Retighten if necessary. •Replace gasket if necessary.			○	○
Drive chain	•Check and adjust slack/alignment/clean/lube.		○	○	○
***Wheels**	•Check balance/damage/runout. •Replace if necessary.		○	○	○
***Wheel bearings**	•Check bearing assembly for looseness/damage. •Replace if damaged.		○	○	○
***Steering system**	•Check operation. •Replace if damaged. •Check toe-in. •Adjust if necessary.		○	○	○
***Knuckle shafts/ Steering shaft**	•Lubricate every 6 months.			○	○
***Fittings and Fasteners**	•Check all chassis fittings and fasteners. •Correct if necessary.		○	○	○

* : It is recommended that these items be serviced by a KYMCO dealer.

** : Lithium soap base grease.

ENGINE OIL

1.Engine oil level measurement

A. Place the machine on a level place.

B. Warm up the engine for several minutes and stop it.

C. Check the oil level through the inspection window.

D. The oil level should be between the maximum (H) and minimum (L) marks. If the level is low, add oil to raise it to the proper level.

NOTE:

Wait a few minutes until the oil level settles before checking.

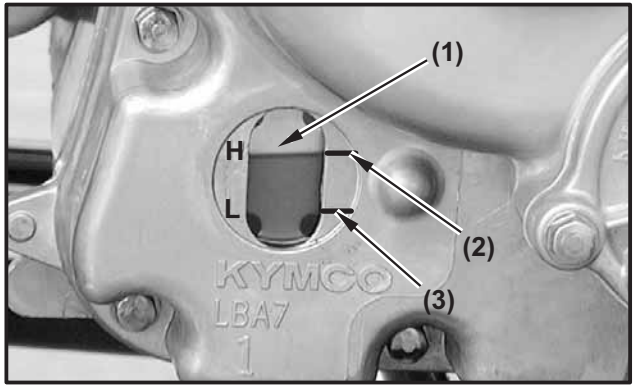

(1) Engine oil inspection window

(2) Maximum level mark (H)

(3) Minimum level mark (L)

2-1. Engine oil replacement and oil filter cleaning

A. Place the machine on a level place.

B. Warm up the engine for several minutes and stop it.

C. Place a container under the engine.

D. Remove the oil fill cap (1) and oil filter cap (2) to drain the oil.

CAUTION:

Be sure no foreign material enters the crankcase.

CAUTION:

When removing the oil filter cap, the compression spring, oil strainer and O-ring will fall out. Take care not to lose these parts.

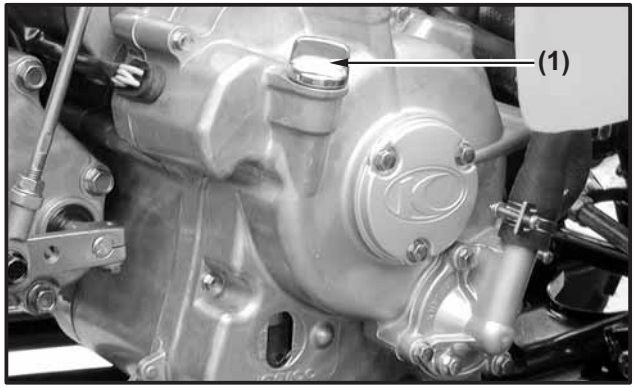

(1) Oil fill cap

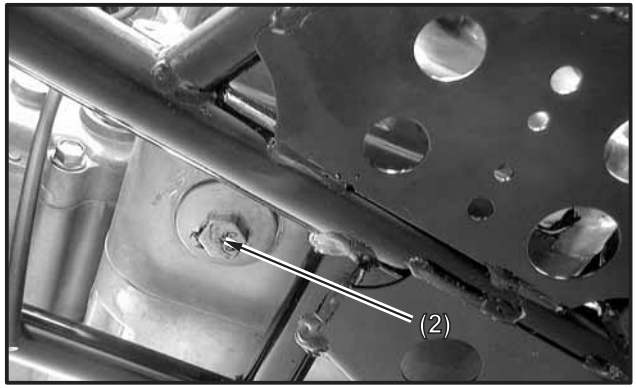

(2) Oil filter cap

E. Clean the oil strainer with solvent.

F. Inspect the O-ring and replace if damaged.

G. Reinstall the O-ring, oil strainer, compression spring and oil filter cap. Tighten the oil filter cap to specification.

CAUTION:

Before reinstalling the drain plug, be sure to install the O-ring, compression spring and oil strainer.

Tightening torque:
Oil filter cap (engine):
14.7 Nm (1.5 m-kg, 11 ft-lb)

H. Fill the engine with oil and install the oil fill cap.

Recommended oil: see page 143

Oil quantity:

Periodic oil change:
1.4L (1.23 Imp qt, 1.47US qt)

Total amount:
1.6L (1.41 Imp qt, 1.68US qt)

CAUTION:

Be sure no foreign material enters the crankcase.

I. Warm up the engine for several minutes at idle speed. Check for oil leakage while warming up.

CAUTION:

If oil leakage is found, stop the engine immediately and check for the cause.

2-2. Engine oil replacement

A. Place the machine on a level place.

B. Warm up the engine for several minutes and stop it.

C. Place a container under the engine.

D. Remove the oil fill cap (1) and drain plug (2) to drain the oil.

E. Reinstall the drain plug and tighten the drain plug to specification.

F. Fill the engine with oil and install the oil fill cap.

Tightening torque:
Drain plug (engine):
30 Nm (3.0 m-kg, 22 ft-lb)

CAUTION:

Be sure no foreign material enters the crankcase.

Recommended oil: see page 143.

Oil quantity: see page 143.

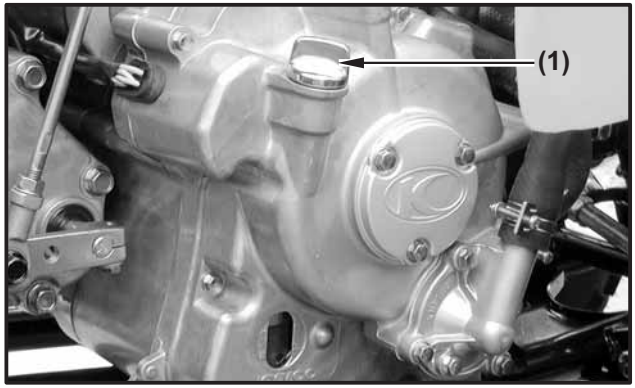

(1) Oil fill cap

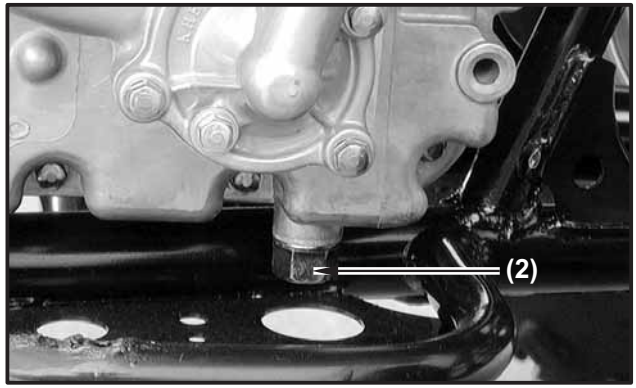

(2) Drain plug

TRANSMISSION OIL

Transmission oil replacement

1. Remove 6 screws/nuts, 4 bolts and right footboard. (Page 49)
2. Place the machine on a level place.
3. Place a container under the engine.
4. Remove the oil filler bolt .

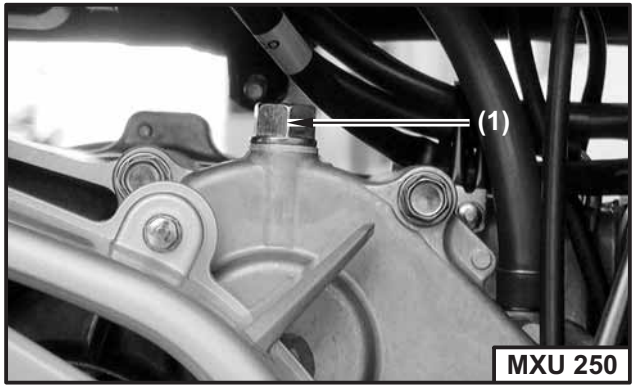

(1) Oil filler bolt

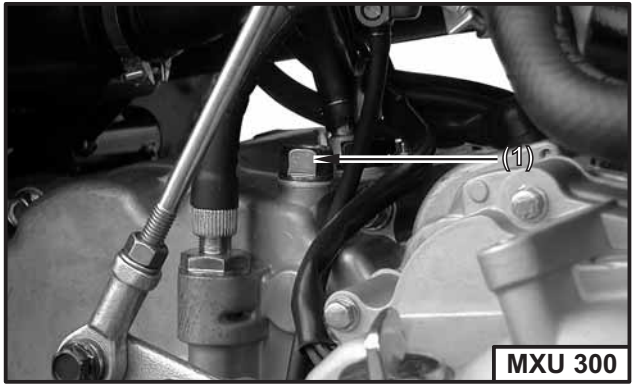

(1) Oil filler bolt

5. Remove the drain plug (2) to drain the oil.
6. Reinstall the drain plug and tighten to Specification.

Tightening torque
Drain plug: 20 Nm (2 m-kg, 15 ft-lb)

7. Fill the engine with oil and install the oil filler bolt.

Recommended oil: SEA #90.
Oil quantity: See page 143.

CAUTION:

Be sure no foreign material enters the crankcase.

Tightening torque
Oil filler bolt: 20 Nm (2 m-kg, 15 ft-lb)

8. Start the engine and warm up for a few minutes. While warming up, check for oil leakage. If oil leakage is found, stop the engine immediately and check for the cause.

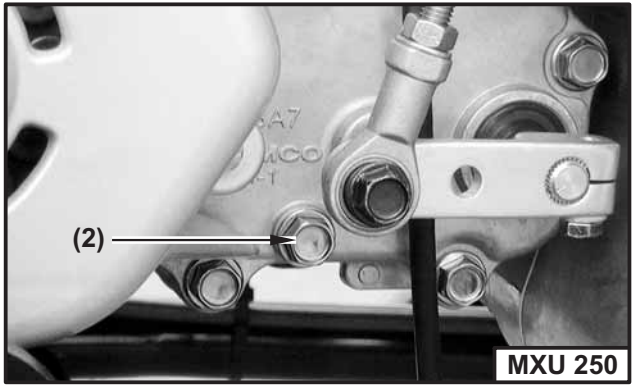

(2) Drain plug

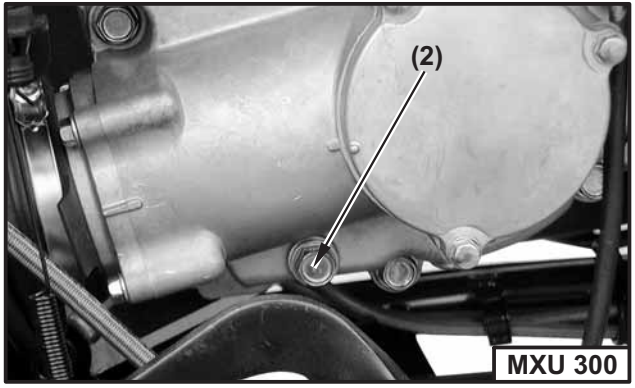

(2) Drain plug

REAR FINAL GEAR CASE OIL (MXU 300)

Change the oil in the rear final gear case when specified by the Maintenance Schedule. Change the oil with the final gear case warm, and the ATV on level ground to assure complete and rapid draining.

Rear final gear oil replacement

1. To drain the oil, first place an oil drain pan under the oil drain plug (1).
2. Remove the oil filler cap (2).

(1) Oil drain plug

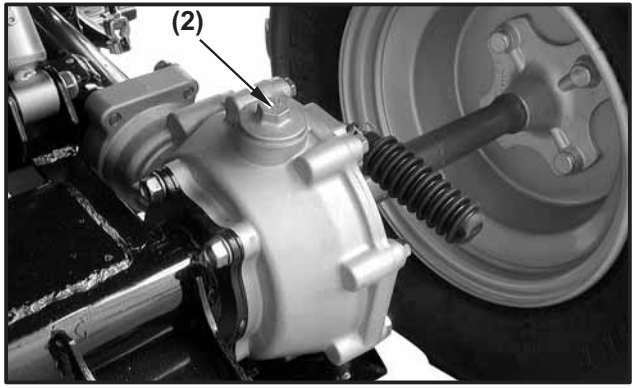

(4) Oil filler cap

3. Remove the drain plug.
4. After the oil has completely drained, reinstall the drain plug.

Tightening torque
Drain plug: 20 Nm (2 m-kg, 15 ft-lb)

5. Fill the gear case with the recommended oil.

Recommended oil : SAE 90 Oil quantity : Periodic oil change 0.1 L (3.56 Imp oz, 3.33 US oz)

Remove the oil level check bolt (3).
Make sure the oil level reaches the oil level check hole.

6. Install the oil filler cap and oil level check bolt.

Tightening torque: Oil filler cap: 14.7 Nm (1.5 m-kg, 11 ft-lb) Oil level check bolt: 20 Nm (2 m-kg, 15 ft-lb)

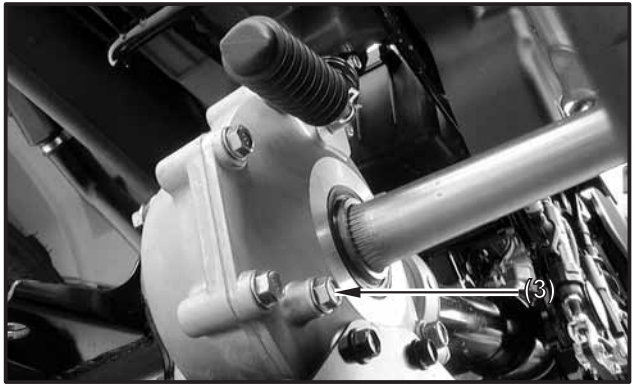

(3) Oil level check bolt

SPARK PLUG INSPECTION

The spark plug is an important engine component and is easy to inspect. The condition of the spark plug can indicate the condition of the engine.

For example, a very white center electrode porcelain color could indicate an intake air leak or carburetion problem for that cylinder. Do not attempt to diagnose such problems yourself. Instead, take the machine to a KYMCO dealer.

You should periodically remove and inspect the spark plug because heat and deposits will cause the spark plug to slowly break down and erode.

If electrode erosion becomes excessive, you should replace the spark plug with one of the proper type.

Standard spark plug:
DPR7EA-9

Before installing the spark plug, measure the electrode gap with a feeler gauge and adjust to specification.

Spark plug gap:
0.6~0.7 mm (0.024~0.028 in)

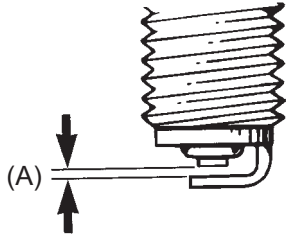

(A) Spark plug gap

When installing the spark plug, always clean the gasket surface and use a new gasket. Wipe off any grime from the threads and tighten to the specified torque.

Tightening torque:
Spark plug:
17.2 Nm (1.72 m.kg, 13 ft.lb)

AIR FILTER CLEANING

The air cleaner accumulates dust and must be cleaned periodically. If the ATV is ridden in dusty areas, the air cleaner must be cleaned at more frequent intervals than specified in the Maintenance Schedule. If the ATV is submerged in water, the air cleaner should be checked and water should be drained from the air cleaner housing before starting the engine.

To clean the air cleaner:

1. Remove the seat. (See page 42.)
2. Unlatch the four retainer clips (1) and remove the air cleaner housing cover (2).
3. Loosen the screw (3) and remove the air cleaner assembly (4) from the air cleaner housing.
4. Unscrew the clamp (5)

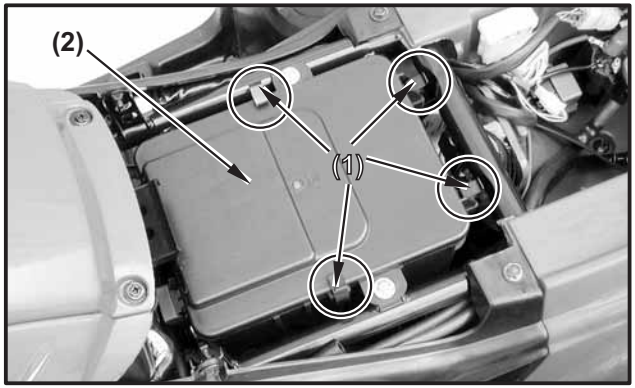

(1) Retainer clips (2) Air cleaner housing cover

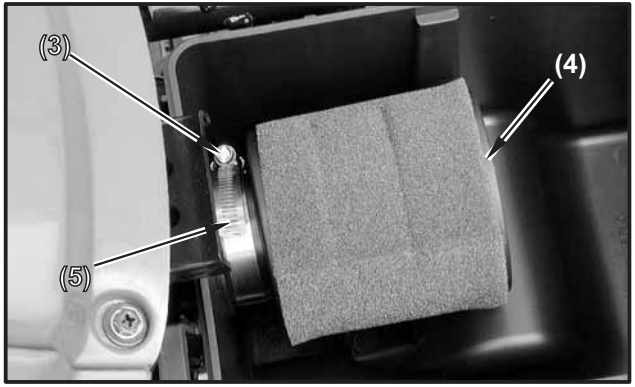

(3) Screw (4) Air cleaner assembly (5) Clamp

5. Remove the screw (6) and remove the air cleaner assembly from the air cleaner holder.
6. Remove the air cleaner (7) and air cleaner screen (8) from the air cleaner guide (9).
7. Remove the air cleaner screen from the air cleaner.

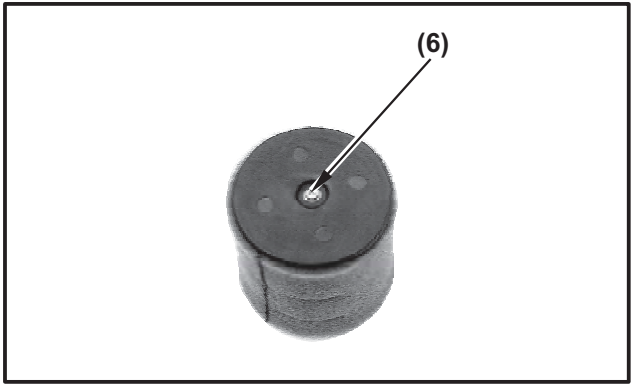

(6) Screw

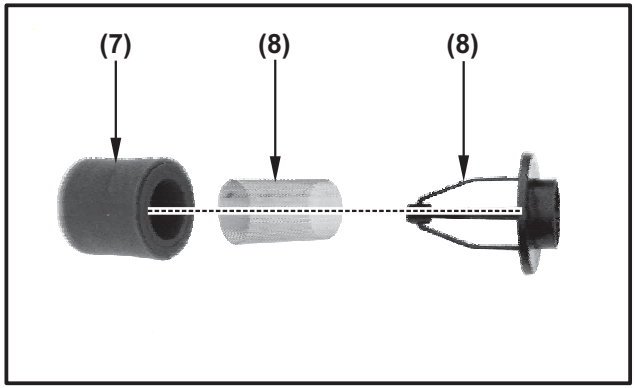

(7) Air cleaner
(8) Air cleaner screen
(9) Air cleaner guide

8. Gently wash the air cleaner in clean, non-flammable (high flash point) solvent such as kerosene —not gasoline. Allow the air cleaner to dry throughly before applying oil. A wet air cleaner will not fully absorb the oil.

⚠ WARNING

POTENTIAL HAZARD

Using gasoline or low flash point solvents for cleaning ATV parts.

WHAT CAN HAPPEN

A fire or explosion could result.

HOW TO AVOID THE HAZARD

Use only a nonflammable or high flash point solvent to clean ATV parts.

9. Soak the air cleaner an equivalent (gear oil: SAE 80 - 90) until saturated, then squeeze out the excess oil.

NOTE:

The element should be wet but not dripping.

CAUTION:

Twisting the air cleaner when squeezing out excess oil could damage the air cleaner.

10. Reassemble by reversing the disassembly sequence.

AIR CLEANER HOUSING DRAIN TUBE

The air cleaner housing drain tube should be serviced in accordance with the Maintenance Schedule. (Riding through water may require more frequent inspection.) If deposits can be seen in the drain tube, the tube must be cleaned before starting the vehicle.

To clean the drain tube:

1. Remove the drain tube (1) by removing the clip.
2. Drain the deposits.
3. Reinstall the drain tube, securing it with the clip (3).

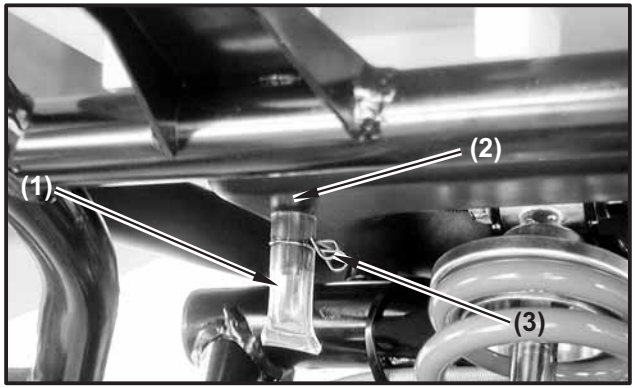

(1) Drain tube
(2) Air cleaner housing
(3) Clip

IDLE SPEED ADJUSTMENT

NOTE:

A diagnostic tachometer must be used for this procedure.

1. Start the engine and warm it up for a few minutes at approximately 1,000 to 2,000 r/min. Occasionally rev the engine to 4,000 to 5,000 r/min. The engine is warm when it quickly responds to the throttle.
2. Connect the tachometer and set the idle to the specified idling speed by adjusting the throttle stop screw. Turn the screw in to increase engine speed, and out to decrease engine speed.

Specified idle speed:
1,400~1,600 r/min

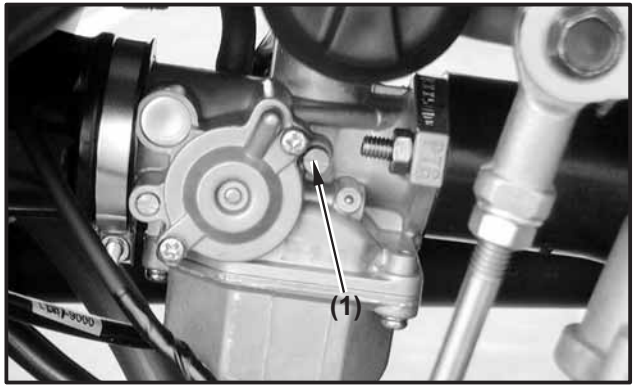

(1) Throttle stop screw

THROTTLE LEVER ADJUSTMENT

NOTE:

Adjust the engine idling speed before adjusting the throttle lever free play.

To adjust throttle free play:

1. Slide the rubber sleeve (1) back to expose the throttle cable adjuster.
2. Loosen the lock nut (3), then turn the adjuster (2) to obtain the correct free play. (1~4 mm or 0.04~0.16 in)
3. Tighten the locknut and reinstall the sleeve.

Other checks:

Check the throttle cable for kinks and signs of wear that could cause stretching or failure. Lubricate the throttle cable with a commercially available lubricant to prevent premature wear and corrosion.

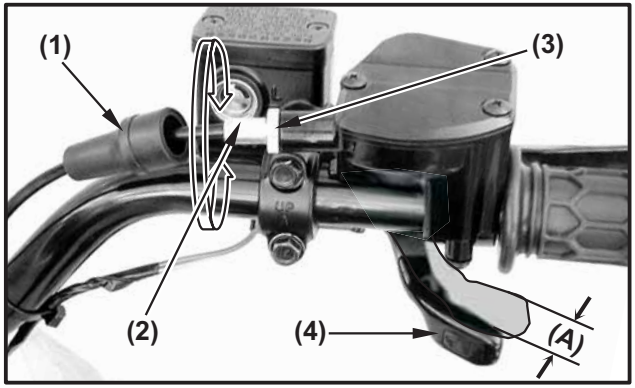

(1) Rubber sleeve (2) Cable adjuster
(3) Locknut (4) Throttle lever
(A) 1~4 mm (0.04~0.16 in)

VALVE CLEARANCE ADJUSTMENT

The correct valve clearance changes with use, resulting in improper fuel/air supply or engine noise. To prevent this, the valve clearance must be adjusted regularly. This adjustment however, should be left to a professional KYMCO service technician.

FRONT BRAKE PADS INSPECTION

A wear indicator is provided on each brake. The indicators allows checking of brake pads wear.Check the position of the indicator. If the indicator reaches the wear limit line, ask a KYMCO dealer to replace the pads.

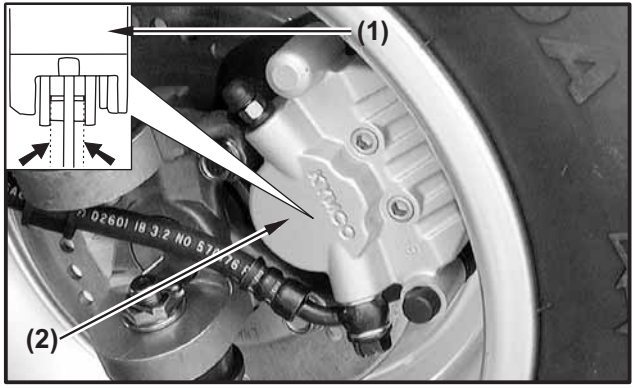

(1) Wear indicator (2) R/L Front brake

REAR BRAKE PADS (MXU 250)INSPECTION

A wear indicator is provided on each brake. The indicators allows checking of brake pads wear.Check the position of the indicator. If the indicator reaches the wear limit line, ask a KYMCO dealer to replace the pads.

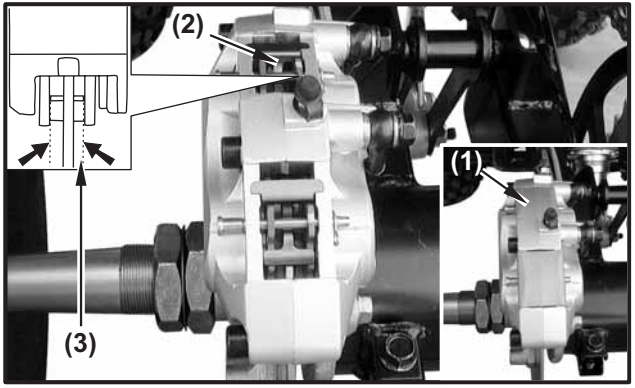

(1) Rear brake pads cover (Rear brake lever)
(2) Rear brake pads (Rear brake lever)
(3) Wear indicator

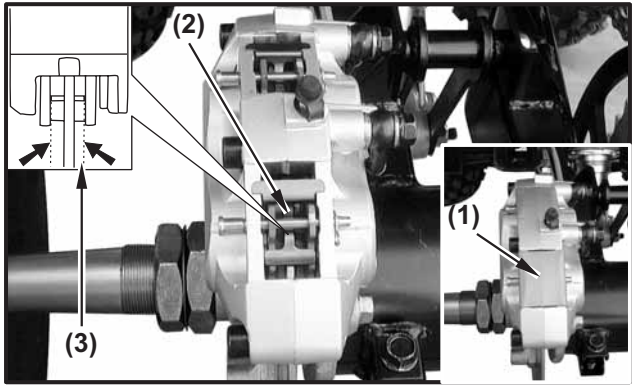

(1) Rear brake pads cover (Rear brake pedal)
(2) Rear brake pads (Rear brake pedal)
(3) Wear indicator

REAR BRAKE PADS (MXU 300)INSPECTION

A wear indicator is provided on each brake. The indicators allows checking of brake pads wear.Check the position of the indicator. If the indicator reaches the wear limit line, ask a KYMCO dealer to replace the pads.

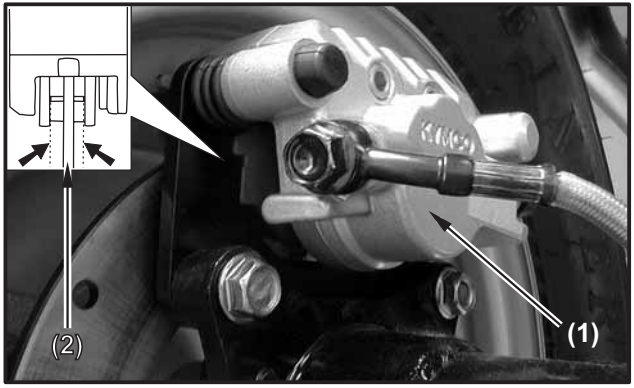

(1) Rear brake

(2) Wear indicator

BRAKE FLUID INSPECTION

Check if the fluid level is below the lower level mark through the inspection window.

⚠ WARNING

POTENTIAL HAZARD

Brake fluid contacting the skink or eyes.

WHAT CAN HAPPEN

May cause irritation.

HOW TO AVOID THE HAZARD

Avoid contacting brake fluid with the skin or eyes. In case of contact, flush thoroughly with water and call a doctor if your eyes were exposed.

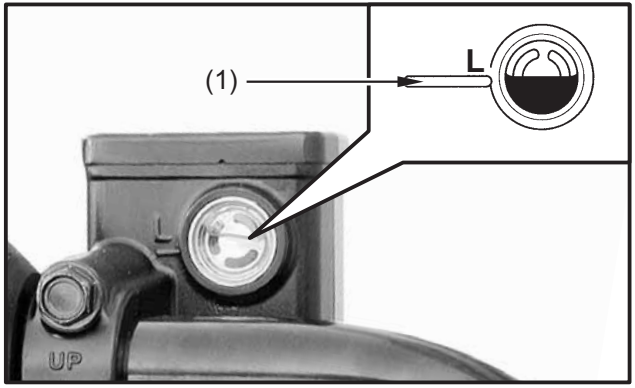

(1) Lower level mark (Hand Brake lever)

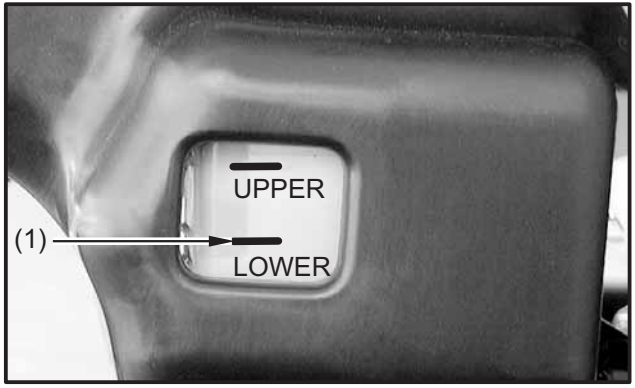

(1) Lower level mark (Foot brake pedal)

NOTE:

- As the brake pads wear, brake fluid level drops, automatically compensating for wear. There are no adjustments to perform, but fluid level and pad wear must be inspected periodically. The system must be inspected frequently to ensure there are no fluid leaks.
- If the brake lever travel become excessive and the brake pads are not worn beyond the recommended limit (page 118~120), There is probably air in the brake system and it must be bled. See your authorized KYMCO dealer for this service.

CAUTION:

- To prevent damage to the brake system, use only fluid from a sealed container. Never allow contaminants (dirt, water, etc.) to enter the brake fluid reservoir.
- Brake fluid can damage paint and plastic, so handle the fluid with care. When adding brake fluid, be sure the reservoir is horizontal before removing the cover to prevent accidental spilling.
- Use only DOT 4 brake fluid from a sealed container.

COOLING SYSTEM INSPECTION

1. Check the coolant level in the coolant reservoir when the engine is cold as the coolant level will vary with engine temperature. The coolant level should be between the maximum and minimum marks.
2. If the level is low, remove the coolant reservoir cap, and then add coolant or distilled water to raise it to the specified level.
3. If your ATV overheats, see page 124 for details.

CAUTION:

Hard water or salt water is harmful to the engine. You may use distilled water if rou can not get soft water.

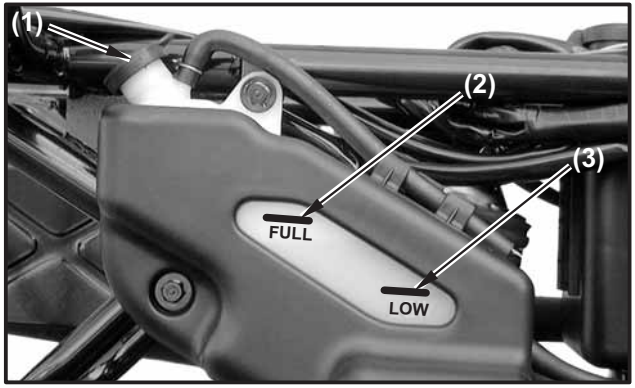

(1) Coolant reservoir cap
(2) Maximum level mark
(3) Minimum level mark

NOTE:

1. If water is added, have a KYMCO dealer check the antifreeze content of the coolant as soon as possible.
2. The radiator fan operation is completely automatic. It is switched on or off according to the coolant temperature in the radiator.

Engine overheating

If your ATV overheat, wait until the engine has cooled.

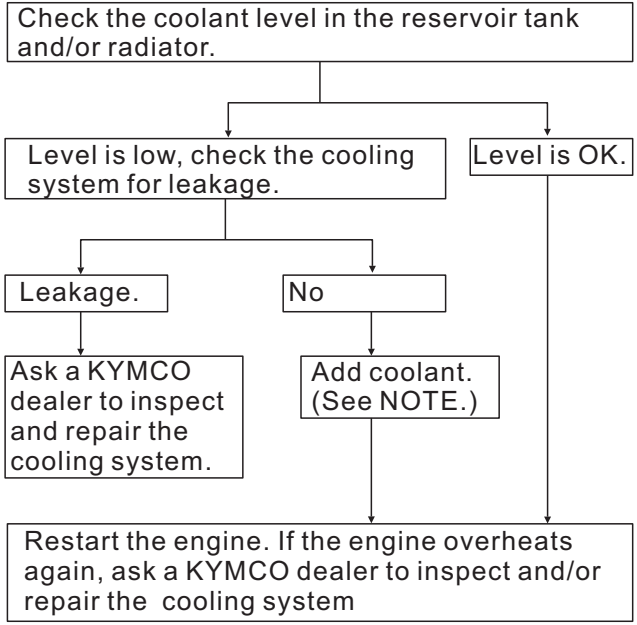

⚠ WARNING

POTENTIAL HAZARD

Removing the radiator cap when the engine and radiator are still hot.

WHAT CAN HAPPEN

You could be burned by hot fluid and steam blown out under pressure.

HOW TO AVOID THE HAZARD

Wait for the engine to cool before removing the radiator cap. Always use a thick rag over the cap. Allow any remaining pressure to escape before completely removing the cap.

Should be serviced by your authorized KYMCO dealer when changing the coolant.

NOTE:

If it is difficult to get the recommended coolant, tap water can be temporarily used, provided that it is changed to the recommended coolant as soon as possible.

DRIVE CHAIN SLACK CHECK (MXU 250)

Inspect the drive chain while all tires are touching the ground. Check the slack at the position shown in the figure. The normal vertical deflection is approximately 30－40 mm (1.18－1.57in). If the deflection exceeds 40 mm (1.57 in), adjust the chain slack.

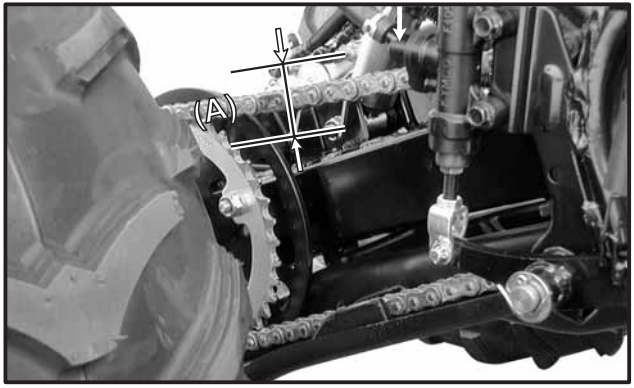

(A) 30－40 mm (1.18－1.57in)

Drive chain slack adjustment (MXU 250):

1. Loosen the hub stopper bolt (1) and two axle hub holding bolts (2).

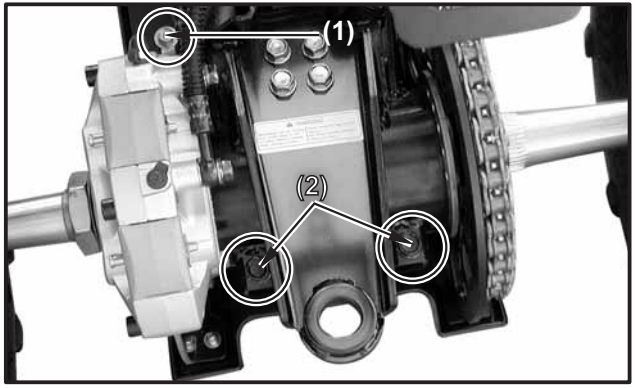

(1) Hub stopper bolt (2) Axle hub holder bolt

2. Provide standard/phillips screwdriver (5) (tool kit) and pass the standard/phillips screwdriver through the axle hub (4) and driven sprocket holder (3) holes.
3. To loosen the chain, push the ATV forward.
   To tighten the chain, pull the ATV backward.
4. Retighten the two axle hub holder bolt and hub stopper bolt to the specification.

Tightening torque: Axle hub holding bolt 40 Nm (4.0 m-kg, 29 ft-lb) Hub stopper bolt: 12 Nm (1.2 m-kg, 9 ft-lb)

5. Pull out the standard/phillips screwdriver.

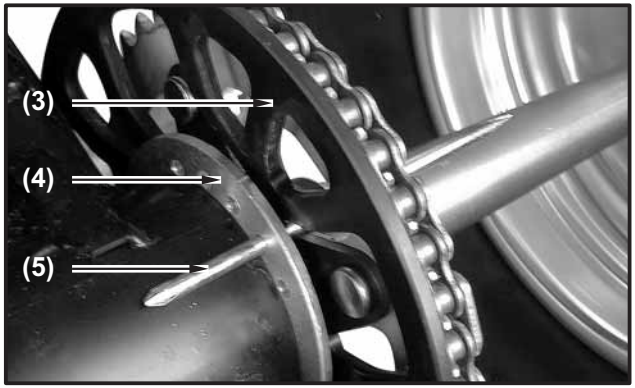

(3) Driven sprocket holder (4) Axle hub
(5) Standard/phillips (tool kit)

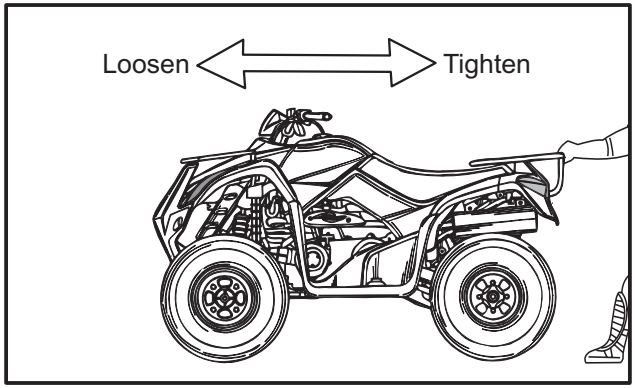

DRIVE CHAIN CLEANING AND LUBRICATION (MXU 250)

The drive chain is equipped with rubber O-rings between the chain plates. Steam cleaning, high-pressure washes, and certain solvents can damage these O-rings. Use only kerosene to clean the drive chain. Wipe it dry, and thoroughly lubricate it with SAE 30~50 motor oil. Do not use any other lubricants on the drive chain. They may contain solvents that could damage the O-rings.

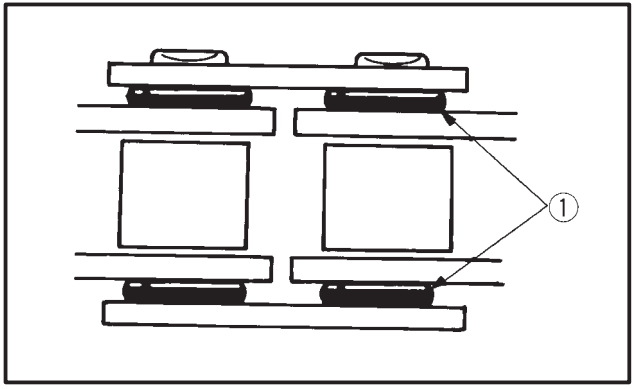

(1) O-rings

REAR SWING ARM LUBRICATION (MXU 250)

Lubricate the pivot points using a grease gun.

DRAINING THE V-BELT COMPARTMENT

If water leaks into V-belt compartment such as when the machine is drive in water, remove the drain screw on the bottom of compartment and drain the water. Be sure to drive slowly until the V-belt becomes dry. If slipping is noticed, ask a KYMCO dealer to inspect.

(1) Drain bolt

CABLE INSPECTION AND LUBRICATION

⚠ WARNING

POTENTIAL HAZARD
Damaged control cables.

WHAT CAN HAPPEN
Corrosion can result when the outer covering of control cables becomes damaged.
Cables can also become frayed or kinked.
Operation of controls could be restricted, which could cause an accident or injury.

HOW TO AVOID THE HAZARD
Inspect cables frequently. Replace damaged cables.

Lubricate the inner cables and the cable ends. If the cables do not operate smoothly, ask a KYMCO dealer to replace them.

Recommended lubricant:
KYMCO chain and cable lube or
SAE 10W40 motor oil

WHEEL REMOVAL

1. Elevate the wheel by placing a suitable stand under the frame.
2. Remove the nuts from the wheel.
3. Remove the wheel assembly.

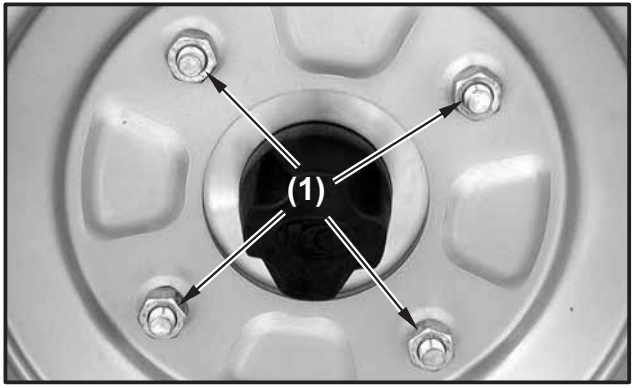

(1) Wheel nut

Wheel installation

When reinstalling a wheel, tighten the wheel nuts in a crisscross (rather than a circular) pattern.

Wheel nut torque:
Front: 45 Nm (4.5 m-kg, 32 ft-lb)
Rear: 45 Nm (4.5 m-kg, 32 ft-lb)

Be sure the tapered side of the wheel nuts (1) face the wheel rim (2).

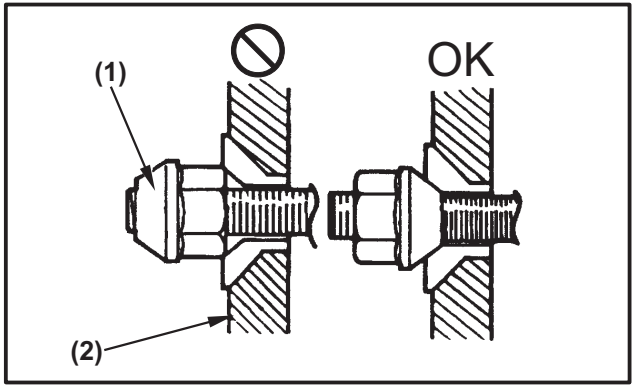

(1) Wheel nut (2) Wheel rim

⚠ WARNING

POTENTIAL HAZARD
Installing wheels improperly.

WHAT CAN HAPPEN
A wheel may come loose, possibly leading to an accident.

HOW TO AVOID THE HAZARD
Carefully follow the instructions in this Owner's Manual when installing.

BATTERY

Your ATV battery is located in a compartment under the seat. The battery is sealed, so it is not necessary to check the electrolyte level or add distilled water. If the battery seems weak, see your authorized KYMCO dealer for information on recharging or replacement. If you replace the battery, choose one that is sealed and equivalent to the original. Be sure to read and follow all safety precautions indicated on the battery.

CAUTION:

- Do not attempt to remove the caps from the battery cells as this may damage the battery.
- Although the battery is sealed, it vents explosive gases and should be handled with appropriate care.

⚠ WARNING

POTENTIAL HAZARD
Allowing open flames or sparks near the battery.

WHAT CAN HAPPEN
Gases may explode and possibly cause injury.

HOW TO AVOID THE HAZARD
Do not allow open flames or sparks near the battery.

NOTE:

- When the ATV is to be stored for an extended period, remove the battery from the vehicle and charge it fully. Then store it in a cool, dry place. If the battery is to be left on the vehicle, disconnect the negative cable from the battery terminal.
- Battery posts, terminals and related accessories contain lead and lead compounds. **Wash hands after handling.**

Battery remove

1. Make sure the ignition switch is OFF.
2. Remove the seat (page 42)
3. Hang license light holder (1), by removing the left mount bolt (2) and loosen the right mount bolt (3).

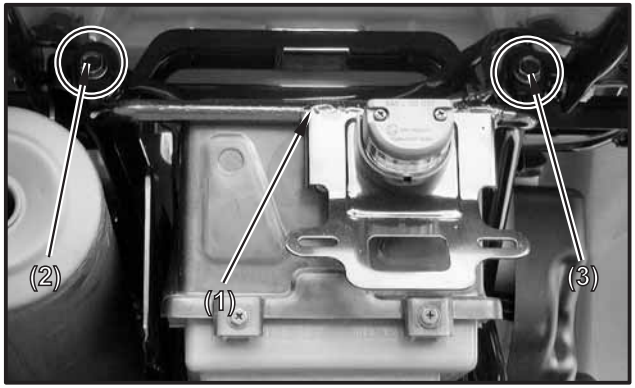

(1) License light holder (2) Left bolt (3) Right bolt

4. Remove the battery cover (4), by removing the screws (5).

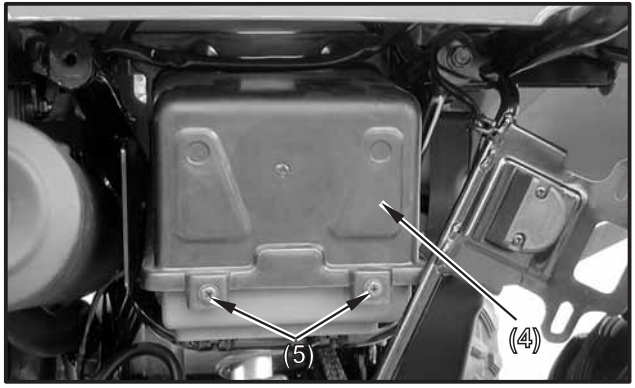

(4) Battery cover (5) Screws

5. Release the rings and remove the rubber band (6).

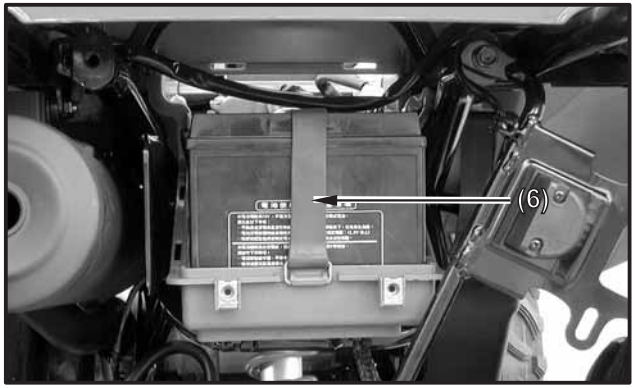

(6) Rubber band

6. Shift the battery (7) and the terminal leads face yourself.
7. Disconnect the negative (-) terminal lead (8) from the battery first, then disconnect the positive (+) terminal lead (9).
8. Remove the battery.

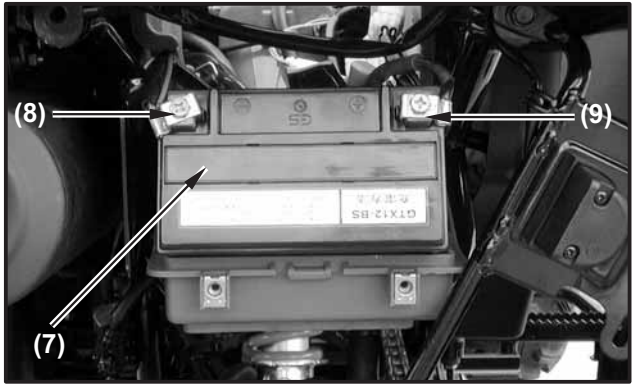

(7) Battery (8) (-) terminal lead (9) (-) terminal lead

Battery installation

1. Install in the reverse order of removal.
2. Make sure the battery is installed upright as shown.

3. Check all bolts and other fasteners are secure.
4. After installing the battery, check to see if the battery cables are routed correctly.

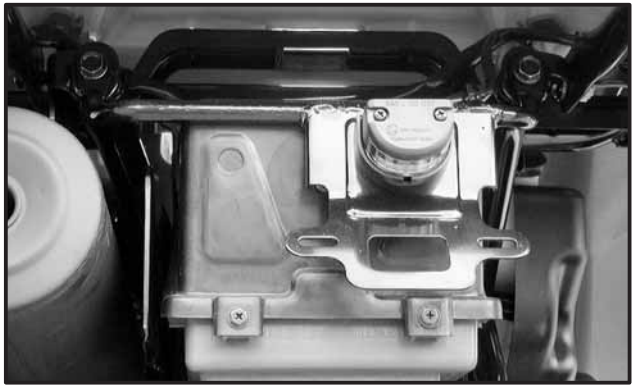

FUSE REPLACEMENT

The fuse box stored in the battery compartment under the seat. The fuse box contains a spare fuse.

The specified fuse is: 15 A

To replace a fuse:

1. Make sure the ignition switch is OFF.

CAUTION:

To prevent accidental short-circuiting, turn off the main switch when checking or replacing a fuse.

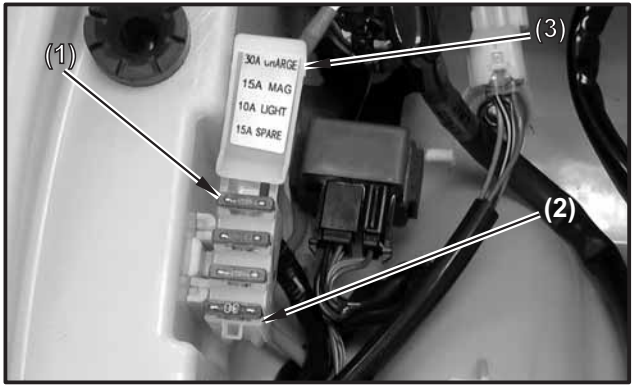

(1) Spare fuse (2) Fuse box (3) Fuse box cap

2. Remove the seat (page 42)
3. Open the fuse box cap (3).
4. Pull the old fuse out of the fuse holder.
5. Push the new fuse in to the fuse holder.
6. Close the fuse box cap and install seat.

⚠ WARNING

POTENTIAL HAZARD

Using an improper fuse.

WHAT CAN HAPPEN

An improper fuse can cause damage to the electrical system which could lead to a fire.

HOW TO AVOID THE HAZARD

Always use a fuse of the specified rating.

Never use a material in place of the proper fuse.

HEADLIGHT BEAM ADJUSTMENT

CAUTION:

It is advisable to have a KYMCO dealer make this adjustment.

To adjust:

Turn the ignition switch at "☼" position and start the engine.

Turn on the dimmer switch.

Adjust the headlight aim by turning the headlight aim adjusting screws.

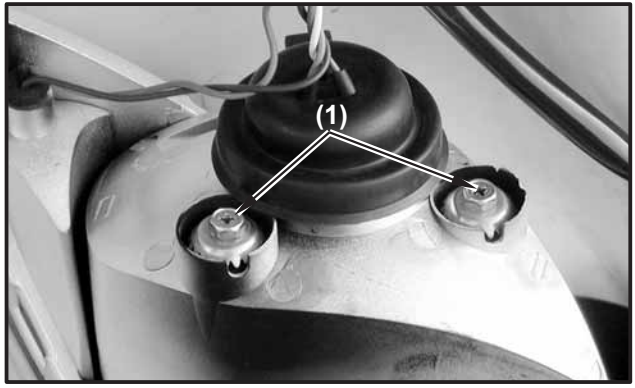

(1) Adjusting screws

TROUBLESHOOTING

Although KYMCO machines receive a rigid inspection before shipment from the factory, trouble may occur during operation. Any systems can cause poor starting and loss of power. The troubleshooting chart describes a quick, easy procedure for making checks. If your machine requires any repair, take it to a KYMCO dealer.

The skilled technicians at a KYMCO dealership have the tools, experience, and know-how to properly service your machine. Imitation parts may look like KYMCO parts, but they are often inferior. Consequently, they have a shorter service life and can lead to expensive repair bills.

⚠ WARNING

POTENTIAL HAZARD

Checking the fuel system while smoking or near an open flame.

WHAT CAN HAPPEN

Fuel can ignite or explode, causing severe injury or property damage.

HOW TO AVOID THE HAZARD

Do not smoke when checking the fuel system. Make sure there are no open flames or sparks in the area, including pilot lights from water heaters or furnaces.

Troubleshooting chart

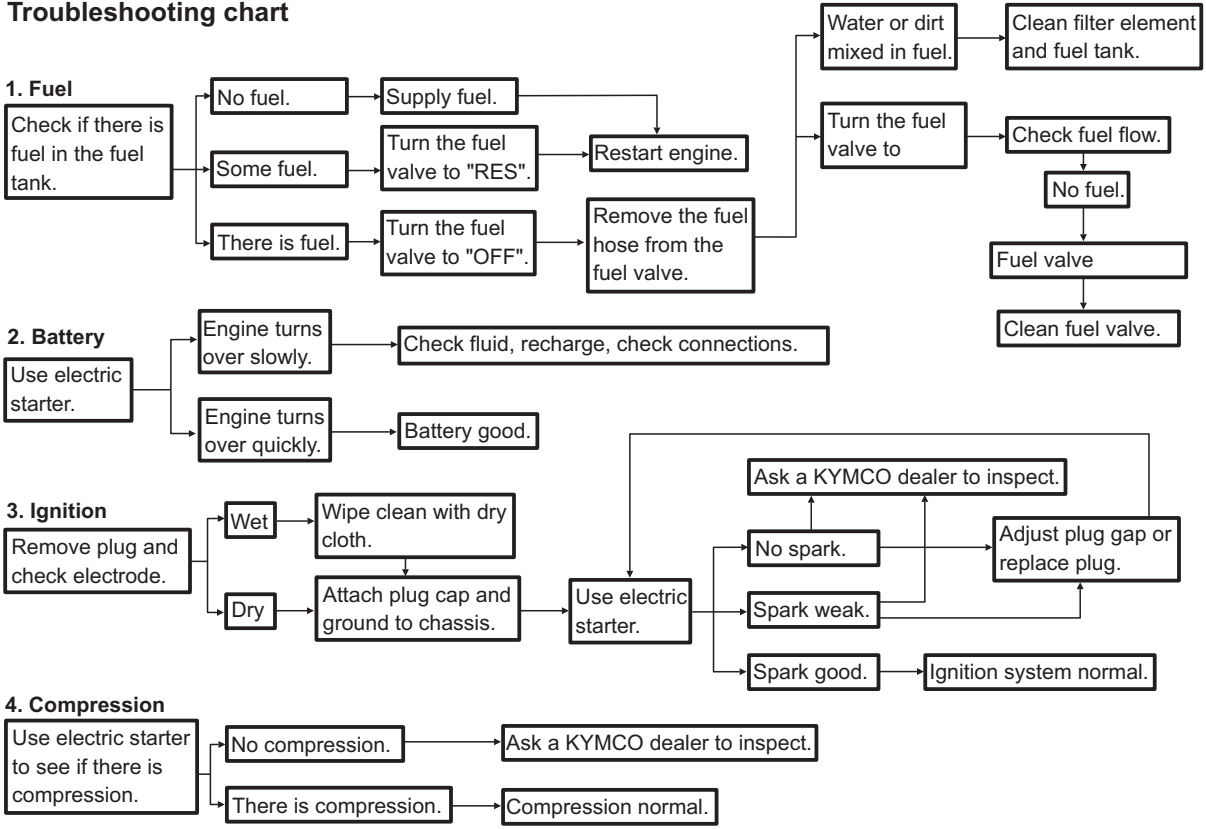

CLEANING AND STORAGE

A. CLEANING

Frequent, thorough cleaning of your machine will not only enhance its appearance but will improve its general performance and extend the useful life of many components.

1. Before cleaning the machine:
   A. Block off the end of the exhaust pipe to prevent water entry. A plastic bag and strong rubber band may be used.
   B. Make sure the spark plug and all filler caps are properly installed.
2. If the engine case is excessively greasy, apply degreaser with a paint brush. Do not apply degreaser to the chain, sprockets or wheel axles.
3. Rinse the dirt and degreaser off with a garden hose. Use only enough pressure to do the job.

CAUTION:

Excessive water pressure may cause water seepage and deterioration of wheel bearings, brakes, transmission seals and electrical devices. Many expensive repair bills have resulted from improper high pressure detergent applications such as those available in coin-operated car washers.

4. Once the majority of the dirt has been hosed off, wash all surfaces with warm water and mild, detergent-type soap. An old toothbrush or bottle brush is handy for hard-to-get-at places.
5. Rinse the machine off immediately with clean water and dry all surfaces with a chamois, clean towel or soft absorbent cloth.
6. Dry the chain and lubricate it to prevent rust.

7. Clean the seat with a vinyl upholstery cleaner to keep the cover pliable and glossy.
8. Automotive type wax may be applied to all painted and chrome plated surfaces. Avoid combination cleaner-waxes. Many contain abrasives which may mar the paint or protective finish.

   When finished, start the engine and let it

⚠ WARNING

POTENTIAL HAZARD

Operation with wet brakes after washing.

WHAT CAN HAPPEN

Wet brakes may have reduced stopping ability, increasing the chance of an accident.

HOW TO AVOID THE HAZARD

Test the brakes after washing. Apply the brakes several times at slow speeds to let friction dry out the linings.

B. STORAGE

Before storing your ATV for an extended time, be sure you thoroughly check the vehicle for needed repairs and have them corrected. Otherwise, the repairs may be forgotten by the time you remove the vehicle from storage.

In addition, extended storage requires that you take the following steps to reduce the effects of deterioration from non-use of the vehicle:

1. Change the engine oil.
2. Drain the fuel tank and carburetor. Be sure to drain the fuel in a well-ventilated area, not in a garage.

⚠ WARNING

POTENTIAL HAZARD

Refueling this ATV or handling fuel improperly.

WHAT CAN HAPPEN

The fuel could explode or ignite.

HOW TO AVOID THE HAZARD

Always refuel this ATV and handle fuel in a well-ventilated area with the engine off.Do not smoke or allow flames or sparks in the area where fuel is handled.

Do not overfill the tank. Be careful not to spill fuel when refueling. After refueling, make sure the fuel fill cap is closed properly and securely.

If any fuel is spilled, make sure the area is dry before starting he engine.

⚠ WARNING

POTENTIAL HAZARD
Prolonged contact of fuel with the skin.
Breathing fuel vapor.

WHAT CAN HAPPEN
The fuel can cause skin irritation.
Fuel vapor could cause lung damage.

HOW TO AVOID THE HAZARD
Avoid repeated or prolonged contact of fuel with the skin or breathing of fuel vapor.

KEEP OUT OF REACH OF CHILDREN.

3. Remove the spark plug and pour one tablespoon (15 - 20 cc)of clean engine oil into the cylinder. Operate the starter for a few seconds to distribute the oil, then reinstall the spark plug.
4. Remove the battery (page 131) And store it in an area protected from freezing temperatures and direct sunlight and out of the reach of children, slow charge the battery once a month.

⚠ WARNING

POTENTIAL HAZARD
Allowing open flames or sparks near the battery.

WHAT CAN HAPPEN
Gases may explode and possibly cause injury.

HOW TO AVOID THE HAZARD
Do not allow open flames or sparks near the battery.

5. Wash and dry the ATV, and wax all painted surfaces.
6. Inflate the tires to their recommended pressures.
7. Place the ATV on blocks to raise all four tires off the ground.

SPECIFICATIONS

Model	MXU 300	MXU 250
Dimension:		
Overall length	1810 mm (72 in)	1810 mm (72 in)
Overall width	1050 mm (42 in)	1050 mm (42 in)
Overall height	1110 mm (44 in)	1110 mm (44 in)
Seat height	810 mm (32in)	810 mm (32 in)
Wheel base	1160 mm (46 in)	1170 mm (47 in)
Minimum ground clearance	125 mm (5 in)	285 mm (11 in)
Minimum turning radius	3200 mm (128 in)	2900 mm (113 in)
Basic weight:		
With oil and full fuel tank	227 kg (499 lbs)	226kg (497 lbs)
Engine:		
Type	Liquid cooled 4-stroke, OHC	Liquid cooled 4-stroke, OHC
Cylinder arrangement:	Single cylinder	Single cylinder
Displacement	270 cm^3 (16.5 cu-in)	249 cm^3 (15.2 cu-in)
Bore x stroke	72.7X65.2 mm (2.9X2.6 in)	72.7X60 mm (29.1X2.4 in)
Compression ratio	10.3:1	10.3:1
Starting system	Electric/Recoil starter	Electric/Recoil starter
Lubrication system:	Wet sump	Wet sump

Model	MXU 300	MXU 250
Engine oil/transmission oil/ rear final gear case oil:		
Type		
Engine oil classification:	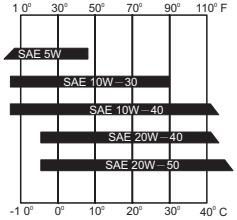 API Service SE, SF, SG type or higher	
Transmission oil classification:	SEA#90	
Rear final gear case oil classification:	SAE #90	
Quantity		
Engine oil:		
Periodic oil change	1.4 L (1.23 Imp qt, 1.48 US qt)	
Total amount	1.6 L (1.41 Imp qt, 1.69 US qt)	
Transmission oil:		
Periodic oil change	0.5 L (0.43 Imp qt, 0.53 US qt)	0.3 L (0.26 Imp qt, 0.32 US qt)
Total amount	0.6 L (0.52 Imp qt, 0.64 US qt)	0.4 L (0.35 Imp qt, 0.42 US qt)
Rear final gear case oil:		
Periodic oil change	0.1 L (3.56 Imp oz, 3.33 US oz)	
Total amount	0.15 L (5.33 Imp oz, 5 US oz)	

Model	MXU 300	MXU 250
Air filter: for engine for V-belt compartment	Wet type element Dry type element	
Fuel: Type Tank capacity Reserve amount	UNLEADED FUEL 12.5 L (2.7 Imp gal, 3.2 US gal) 1.8 L (0.4 Imp gal, 0.47 US gal)	
Carburetor: Type	PTG	
Spark plug: Type Gap	DPR7EA-9 0.6 ~ 0.7 mm (0.024 ~ 0.028 in)	
Clutch: Type	Dry, centrifugal automatic	
Brake: Front brake type Rear brake type	Disk brake Disk brake	

Model	MXU 300	MXU 250
Suspension: Front Rear	 Dual swing A-arm Swing arm	
Shock absorber: Front Rear	 Coil spring/Oil damper Coil spring/Oil damper	
Electrical: Ignition system Generator system Battery type	 C.D.I. C.D.I. Magneto 12V, 12AH	
Tire: Type Size: Front Rear	 Tubeless 22X7-10 22X10-10	
Bulb voltage, wattage*quantity: Headlight Stop light/Taillight Turn signal light Position light	 12V35W/35W X2 12V21W/5W X2 12V10WX4 12V5WX2	

NOISE REGULATION

TAMPERING WITH NOISE CONTROL SYSTEM PROHIBITED:

Some local laws and regulations prohibit the following acts or the causing thereof: (1) The removal or rendering inoperative by any person other than for purposes of maintenance, repair, or replacement of any device or element of design incorporated into any new vehicle for the purpose of noise control prior to its sale or delivery to the ultimate purchaser or while it is in use or (2) the use of the vehicle after such device or element of design has been removed or rendered inoperative by any person.

"AMONG THOSE ACTS PRESUMED TO CONSTITUTE TAMPERING ARE THE ACTS LISTED BELOW".

Exhaust system	Muffler Exhaust pipe Silencer
Intake system	Air cleaner case Air cleaner element Intake duct

MAINTENANCE RECORD

Copies of work orders and/or receipts for parts you purchase and install will be required to document maintenance done in accordance with the warranty. The chart below is printed only as a reminder to you that the maintenance work is required. It is not acceptable proof of maintenance work.

MAINTENACE INTERVAL	DATE OF SERVICE	MONTH	SERVICING DEALER NAME AND ADDRESS	REMARKS
150 km				
1000 km				
2000 km				
3000 km				
4000 km				
5000 km				
6000 km				
7000 km				
8000 km				
9000 km				
10000 km				

INDEX

Page

A

ACCESSORIES.....70, 82, 83
ACCESSORY SOCKET SEAT.....44
AGE RECOMMENDATION.....A
AIR CLEANER HOUSING DRAIN TUBE...115
AIR FILTER CLEANING 112
APPAREL.....78

B

BATTERY.....130
Battery remove.....131
Battery installation.....133
BRAKE FLUID INSPECTION.....121
BRAKE PEDAL.....35

Page

C

CABLE INSPECTION AND LUBRICATION.....128
CHAIN..... 55
CHOKE KNOB.....41
CLEANING..... 138
CLIMBING UP SLOPE 90
CONTENTS..... D
CONTROL FUNCTIONS..... 18
COOLANT..... 58
Coolant temperature gauge.....24
COOLING SYSTEM INSPECTION.....123

(Cont'd)

Page

D

DRAINING THE V-BELT COMPARTMENT.....128
DRIVE CHAIN CLEANING AND LUBRICATION (MXU 250)..... 127
Drive chain slack adjustment (MXU 250)...125
DRIVE CHAIN SLACK CHECK (MXU 250)..... 125
DRIVE SELECT LEVER..... 38, 47
Drive select lever adjustment.....49
DRIVE SELECT LEVER OPERATION AND REVERSE DRIVING.....64
DURING OPERATION..... 85

E

ENGINE BREAK-IN.....67
ENGINE OIL.....54,103
ENGINE OVERHEATING.....124
ENGINE SERIAL NUMBER..... 11
EXHAUST SYSTEM.....87

Page

F

FITTINGS AND FASTENERS.....55
FLAG POLE BRACKET.....43
FRAME SERIAL NUMBER 11
FRONT BRAKE.....51, 115
FRONT BRAKE LEVER.....35
FUEL..... 52
Fuel gauge.....25
FUEL TANK CAP..... 39
FUEL VALVE.....39
FUSE REPLACEMENT.....134

H

HANDLEBAR SWITCHES..... 28
Hazard switch.....30
HEADLIGHT BEAM ADJUSTMENT 135
Headlight dimmer switch.....29
High beam indicator..... 19
Horn button.....28

(Cont'd)

Page

I

IDLE SPEED ADJUSTMENT 116
IGNITION SWITCH.....18
IMPORTANT NOTICES..... A
INSTRUMENTS AND INDICATOR.....19

K

KEY IDENTIFICATION NUMBER..... 10

L

Left turn signal indicator.....19
LIGHTS.....55
LOADING..... 71, 82
LOCKING STEERING.....37
Low gear indicator.....20

M

MODIFICATIONS.....84
Multi-function display.....21

Page

N

Neutral indicator.....20
No Modifications..... 84

O

Odometer 26
OPERATION 60

P

PARKING 68, 97
PARKING BRAKE.....36
Parking on a slope 69
PARTS LOCATION.....12
PERIODIC MAINTENANCE/
LUBRICATION..... 101
PERIODIC MAINTENANCE AND
ADJUSTMENT.....99
PRACTICING.....88
PREFACE C
PRE-OPERATION CHECKS.....46, 80

(Cont'd)

Page

R

REAR BRAKE.....51, 119, 120
REAR BRAKE LEVER.....35
REAR FINAL GEAR CASE
OIL (MXU 300).....54, 109
REAR SWING ARM LUBRICATION.....127
RECOIL STARTER.....32, 62
Reverse indicator.....20
RIDING DOWN SLOPE..... 96
RIDING YOUR ATV.....73
Right turn signal indicator.....20

S

SAFETY INFORMATION.....5
SEAT..... 42
SPARK PLUG INSPECTION.....110
SPECIAL MESSAGES ..... B
SPECIFICATIONS 142
SPEED LIMITER.....34
Speedometer 25
Starter switch..... 31
STARTING A COLD ENGINE..... 60
STARTING A WARM ENGINE..... 63
STORAGE..... 140
STORAGE COMPARTMENT..... 44
SWITCHES.....55

Page

T

THROTTLE LEVER.....33, 55
THROTTLE LEVER ADJUSTMENT.....117
TIRES.....56
Tire wear limit..... 58
TOOL KIT.....99
TRAILER HITCH.....43
TRANSMISSION OIL..... 54, 107
Tripmeter.....26
TROUBLESHOOTING 136
Troubleshooting chart 137
Turn signal switch..... 28
TURNING YOUR ATV.....89

W

Warning information 2
WARMING UP 63
Wheel installation.....129
WHEEL REMOVAL.....129

V

VALVE CLEARANCE ADJUSTMENT.....118

KWANG YANG MOTOR CO.,LTD.

NO.35 Wan Hsing Street, San Min District

Kaohsiung, Taiwan, Republic of China

Telephone : 886-7-3822526

FAX : 886-7-3950021

By KWANG YANG Motor Co., Ltd.
First Edition, Feb 2005
All rights reserved. Any reproduction or unauthorized use without the written permission of KWANG YANG Motor Co., Ltd. is expressly prohibited.
4121-LCA5/LDE9-U00

KYMCO

⚠ WARNING

Improper ATV use can result in SEVERE INJURY or DEATH.

ALWAYS USE AN
APPROVED HELMET
AND PROTECTIVE
GEAR

NEVER USE
WITH DRUGS
OR ALCOHOL

NEVER operate :

- **Without proper training or instruction.**
- **At speeds too fast for your skills or the conditions.**
  Do not operate the vehicle after consuming ALCOHOL OR DRUGS.

ALWAYS :

- **Use proper riding techniques to avoid vehicle overturns on hills and rough terrain and in turns.**
- **For your safety, wear gear to include helmet gloves and foot protection.**
- **Gasoline is flammable shut off engine, avoid sparks and open flame when refueling.**

READ OWNER'S MANUAL, FOLLOW ALL INSTRUCTIONS AND WARNINGS.